ID# AD59366 S# 1216
PO# 233670 JO# 375089
REC'D 8-31-89 DEPT 300AB
OPTIONS

MAINTENANCE DATA PACKAGE

RD-301

10200 West York Street/Wichita, Kansas 67215 U.S.A./(316) 522-4981/TWX 910-741-6952

1007-4901-000

MAINTENANCE DATA PACKAGE

RD-301
RADAR TEST SET

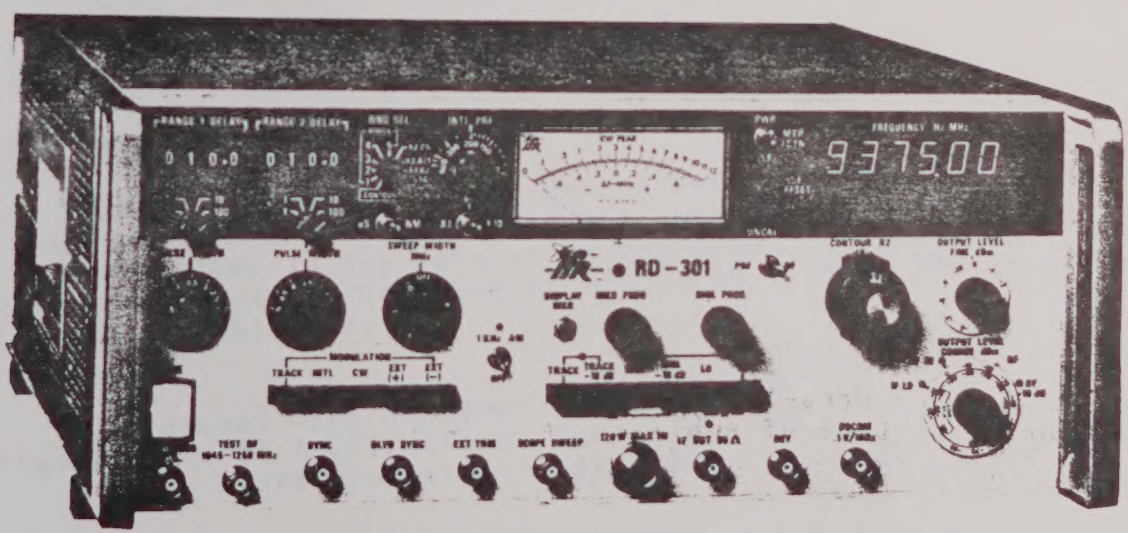

10200 West York Street/Wichita, Kansas 67215 U.S.A./(316) 522-4981/TWX 910-741-6952

1007-4901-000

PUBLISHED BY
IFR SYSTEMS, INC.
Wichita, Kansas

COPYRIGHT 1988 by IFR SYSTEMS, INC.

All rights reserved. Printed in the United States of America. No part of this publication may be reproduced, stored in a retrieval system, or transmitted in any form or by any means, electronic, mechanical, photocopying, recording or otherwise without the prior permission of the publisher.

Manual Part Number: 1007-4901-000
Original Date of Publication: February, 1987
First Revision: May, 1988

Digitized by the Internet Archive
in 2025

https://archive.org/details/manualsplus_10797

WARNING:

HIGH VOLTAGE EQUIPMENT

THIS EQUIPMENT CONTAINS CERTAIN CIRCUITS AND/OR COMPONENTS OF EXTREMELY HIGH VOLTAGE POTENTIALS, CAPABLE OF CAUSING SERIOUS BODILY INJURY OR DEATH. WHEN PERFORMING ANY OF THE PROCEDURES CONTAINED IN THIS MANUAL, HEED ALL APPLICABLE SAFETY PRECAUTIONS.

RESCUE OF SHOCK VICTIMS

1. DO NOT ATTEMPT TO PULL OR GRAB THE VICTIM
2. IF POSSIBLE, TURN OFF THE ELECTRICAL POWER.
3. IF YOU CANNOT TURN OFF ELECTRICAL POWER, PUSH, PULL OR LIFT THE VICTIM TO SAFETY USING A WOODEN POLE, A ROPE OR SOME OTHER DRY INSULATING MATERIAL.

FIRST AID

1. AS SOON AS VICTIM IS FREE OF CONTACT WITH SOURCE OF ELECTRICAL SHOCK, MOVE VICTIM A SHORT DISTANCE AWAY FROM SHOCK HAZARD.
2. SEND FOR DOCTOR AND/OR AMBULANCE.
3. KEEP VICTIM WARM, QUIET AND FLAT ON HIS/HER BACK.
4. IF BREATHING HAS STOPPED , ADMINISTER ARTIFICIAL RESUSCITATION. STOP ALL SERIOUS BLEEDING.

CAUTION

- INTEGRATED CIRCUITS AND SOLID STATE DEVICES SUCH AS MOS FET'S, ESPECIALLY CMOS TYPES, ARE SUSCEPTIBLE TO DAMAGE BY ELECTROSTATIC DISCHARGES RECEIVED FROM IMPROPER HANDLING, THE USE OF UNGROUNDED TOOLS, AND IMPROPER STORAGE AND PACKAGING. ANY MAINTENANCE TO THIS UNIT MUST BE PERFORMED WITH THE FOLLOWING PRECAUTIONS:

  1. BEFORE USING IN A CIRCUIT, KEEP ALL LEADS SHORTED TOGETHER EITHER BY THE USE OF VENDOR-SUPPLIED SHORTING SPRINGS OR BY INSERTING LEADS INTO A CONDUCTIVE MATERIAL.

  2. WHEN REMOVING DEVICES FROM THEIR CONTAINERS, GROUND THE HAND BEING USED WITH A CONDUCTIVE WRISTBAND.

  3. TIPS OF SOLDERING IRONS AND/OR ANY TOOLS USED MUST BE GROUNDED.

  4. DEVICES MUST NEVER BE INSERTED INTO NOR REMOVED FROM CIRCUITS WITH POWER ON.

  5. PC BOARD, WHEN TAKEN OUT OF THE SET, MUST BE LAID ON A GROUNDED CONDUCTIVE MAT OR STORED IN A CONDUCTIVE STORAGE BAG.

NOTE

Remove any built-in power source, such as a battery, before laying PC Boards on conductive mat or storing in conductive bag.

  6. PC BOARDS, IF BEING SHIPPED TO THE FACTORY FOR REPAIR, MUST BE PACKAGED IN A CONDUCTIVE BAG AND PLACED IN A WELL-CUSHIONED SHIPPING BOX.

CAUTION

- THE USE OF SIGNAL GENERATORS FOR MAINTENANCE AND OTHER ACTIVITIES CAN BE A SOURCE OF ELECTROMAGNETIC INTERFERENCE TO AVIATION RECEIVERS, WHICH CAN CAUSE DISRUPTION AND INTERFERENCE TO AERONAUTICAL SERVICE OUT TO A DISTANCE OF SEVERAL MILES.

- USERS OF THIS EQUIPMENT SHOULD SCRUTINIZE ANY OPERATION WHICH RESULTS IN RADIATION OF A SIGNAL (DIRECTLY OR INDIRECTLY) AND ENSURE COMPLIANCE WITH INSTRUCTIONS OUTLINED IN FAA CIRCULAR AC 170-6C, DATED FEBRUARY 19, 1981.

RD-301
MAINTENANCE DATA PACKAGE
SECTION 1 - INTRODUCTION

1-1 This data package contains basic maintenance information for the RD-301 Radar Test Set. This Test Set is designed for precision simulator testing of aircraft weather radar and narrow pulse marine radar instruments.

1-2 The data package is divided into seven sections as follows:

SECTION	TITLE
Section 1 -	INTRODUCTION
Section 2 -	SPECIFICATIONS
Section 3 -	CALIBRATION
Section 4 -	MECHANICAL ASSEMBLY DRAWINGS
Section 5 -	PC BOARD DRAWINGS
Section 6 -	SCHEMATICS
Section 7 -	BILLS OF MATERIAL (Numerical Sequence by Assy Part #)

NOTE:

In Sections 4, 5 and 6, drawings are sequenced in the order of precedence where first referenced in the calibration procedure. Each section, in turn, has its own alphabetical index.

1-3 Refer to Operation Manual for:

1 - Description (physical and mechanical description and a list of features).

2 - Operation (installation; description of controls, indicators and connectors; performance check and general operating procedures).

SECTION 2 - SPECIFICATIONS

2-1 RF SIGNAL GENERATOR

Variable Mode Frequency: Continuously variable from 9.295 to 9.500 GHz.

Tracking Mode: Tracks radar transmitter frequencies 9.295 to 9.500 GHz and transmitter power from 0.1 to 12 kW.

Tracking Accuracy:

Radar Transmitter Pulse Width	Maximum Error
30 - 2 µs	±25 kHz *
<2 - .5 µs	±60 kHz
<.5 - .1 µs	±600 kHz
<.1 - .05 µs	±2 MHz

*(10 kHz typical)

ΔF Mode (during track): Signal Generator frequency may be offset ±0.75 MHz from tracking frequency for AFC Centering tests. Front Panel Meter reads ΔF offset. Accuracy is ±20 kHz plus 10% of reading.

Output Power: -50 to -127 dBm in 1 and 10 dB steps calibrated at R/T. Accuracy is ±2 dB.

Contour Boost: Contour Control provides 0 to 20 dB signal boost above the selected RF Output. Accuracy of Contour Boost is ±1 dB from 9.310 through 9.410 GHz. This boost applies to output attenuator settings of -75 dBm to -127 dBm.

Range Number 2 Attenuation: 0-59 dB ±1.5 dB below the RF Output level of Range One, in 1 dB steps. Minimum RF signal level of Range 2 is -127 dBm.

RF Pulse Width: .05 µs to 500 µs continuously variable.

	RF ON/OFF Ratio:	70 dB minimum
	1 kHz AM:	30% AM nominal (1 kHz ± 100 Hz)
	Source VSWR at Waveguide Coupler:	1.25:1 maximum

2-2 IF SIGNAL GENERATOR

	Frequency:	Continuously variable from 20 to 70 MHz.
	Sweep Width:	Continuously variable from 0 to 4 MHz.
	Marker Frequency:	Continuously variable from 20 to 70 MHz.
	Power:	+20 to -130 dBm in 1 and 10 dB steps in two ranges; accuracy is ±2.5 dB plus 1% of setting.
	Pulse Width:	Continuously variable from 0.5 µs to 500 µs.
	ON/OFF Ratio:	48 dB minimum.

2-3 MODULATION MODES

	TRACK:	PRF same as Radar-Under Test (50 Hz to 20 kHz).
	INTL (Internal):	PRF continuously variable from 50 to 5000 Hz.
	CW:	Continuous wave output.
	EXT (+), EXT (-):	External synchronization pulse (see INPUTS, EXT TRIG).

2-4 RANGE

	Range Number 1:	0.1-999.9 µs or nautical miles (NM). Time referenced to the 50% point of leading edge of detected radar transmitter pulse. Residual delay: 0.1 µs ± .05 µs.

Range Number 2:	0.2-999.9 µs or nautical miles (NM). Time referenced to the 50% point of leading edge of detected radar transmitter pulse. Residual delay: 0.4 µs ± .05 µs.
Range Accuracy:	Residual delay ±.01% of selected range delay. Range delay is referenced to 12.3589 µs/NM.
Range Modes:	
CONTOUR:	See RF Signal Generator, Contour Boost.
RINGS 1, 2, 3, 4, 5:	Selectable multiples of Range Number 1.
R2 ON:	Range Number 1 and 2 active.
R2 ALT:	Range Number 2 active every other detected radar pulse.
R1, R2 AUTO:	Either Range Number 1 or Range Number 2 according to detected radar transmitter pulse width. Threshold selection is internally adjustable from 0.2 µs to 1.0 µs. (Standard setting is 0.4 µs.)

2-5 FREQUENCY COUNTER

RF:	Displays RF output frequency of generator. Resolution: 10 kHz Accuracy: ±250 kHz
IF:	Displays IF Generator frequency, or marker frequency upon pushbutton command. Resolution: ±1 kHz Accuracy: .01%
PRF:	Displays pulse repetition frequency. Resolution: 1 Hz Accuracy: ±1 Hz plus .01%

2-6 POWER METER

Range:	0.1 kW to 12 kW peak standard. (1.0 kW to 120 kW optional*) (10 W to 1200 W optional*) *Optional power ranges include an external 10 dB attenuator not calibrated in the system.
Accuracy:	Calibrated at R/T, ±0.6 dB from 1 kW to 12 kW peak standard.
Load VSWR:	1.25:1 maximum.

2-7 OUTPUTS

DET (Detector):	Detected radar transmitter signal (into 50 OHM load).
Spectrum Analyzer: (Back Panel)	Attenuated RF sample of radar transmitter signal.
DSCRM: (Discriminator)	Frequency discriminator output. 0.1v/MHz ± 10% (into 50 OHM load).
SYNC (Scope Sync):	Positive polarity pulse simultaneous with radar transmitter pulse in Track Mode, Internal PRF Generator in Internal Mode, or External Trigger in EXT (+) or EXT (-) Mode.
DLYD SYNC (Delayed Sync):	Simultaneous with Range 1 and Range 2 generator pulses.
SCOPE SWEEP:	100 Hz ramp output approximately 5 volt peak-to-peak.
AUX RF OUT (Back Panel):	Auxiliary RF output from X-Band front end.
VCO OUT (Back Panel):	Sample L-Band signal from VCO.

2-8 INPUTS

EXT TRIG (External Trigger):	AC coupled, either polarity, 2 to 25V peak; 50 Hz to 20 kHz.

2-9 PHYSICAL CHARACTERISTICS

Power:	105 - 125 VAC, 210 - 250 VAC
	50 to 400 Hz
	150 Watts

SECTION 3 - CALIBRATION

3-1 GENERAL

This section contains calibration procedures for the following RD-301 Test Set Functions.

CALIBRATION PROCEDURE NUMBER	CALIBRATION PROCEDURE TITLE
3-2-1	Meter Mechanical Zero Check and Adjustment
3-2-2	Initial Procedure
3-2-3	Power Supply Voltage Test
3-2-4	100 MHz Clock/8.25 GHz LO
3-2-5	IF and Marker Oscillators
3-2-6	Prescaler and Counter Test
3-2-7	IF Generator Power Amplifier
3-2-8	X-Band Generator Tune Range
3-2-9	IF ON/OFF Ratio Test
3-2-10	Main Leveler and Contour Leveler
3-2-11	Internal PRF Control Dial
3-2-12	Discriminator Filter Alignment
3-2-13	Discriminator
3-2-14	Pulse Width (Range 1)
3-2-15	Pulse Width (Range 2)
3-2-16	Pulse Width Delay/Delay Switches
3-2-17	RF ON/OFF Ratio
3-2-18	Panel Peak Power Scale
3-2-19	External Triggering Test
3-2-20	1 kHz AM

NOTE:

Throughout text, item numbers in parentheses relate to Front Panel components shown in Figure 3-12.

3-1-1 SAFETY PRECAUTIONS

As with any piece of electronic equipment, extreme caution should be taken when troubleshooting or working with "live" circuits. Certain circuits and/or components within the RD-301 contain extremely high voltage potentials, CAPABLE OF CAUSING SERIOUS BODILY INJURY OR DEATH (see WARNINGS on following page)! When performing the calibration procedures in this section, be sure to observe the following precautions:

WARNING:

THE REAR PANEL CONNECTOR AND POWER SUPPLY MODULE CARRIES 120 OR 240 VAC AS LONG AS POWER CORD IS CONNECTED TO THE RD-301 AND EXTERNAL AC POWER SOURCE. DO NOT CONTACT THESE OR ANY ASSOCIATED COMPONENTS DURING TROUBLESHOOTING OR CALIBRATION.

REMOVE ALL JEWELRY, OR OTHER APPAREL OF A CONDUCTIVE NATURE BEFORE PERFORMING ANY CALIBRATION PROCEDURES INVOLVING LIVE CIRCUITS.

WHEN WORKING WITH LIVE CIRCUITS OF HIGH POTENTIAL, KEEP ONE HAND IN POCKET OR BEHIND BACK, TO AVOID SERIOUS SHOCK HAZARD.

USE ONLY INSULATED TROUBLESHOOTING TOOLS WHEN WORKING WITH LIVE CIRCUITS.

FOR ADDED INSULATION, PLACE RUBBER BENCH MAT UNDERNEATH ALL POWERED BENCH EQUIPMENT, AND A RUBBER MAT UNDERNEATH TECHNICIAN'S CHAIR.

HEED ALL WARNINGS AND CAUTIONS CONCERNING MAXIMUM VOLTAGES AND POWER INPUTS.

3-1-2 TEST EQUIPMENT REQUIREMENTS

Paragraph 3-3 contains a comprehensive list of test equipment suitable for performing any of the calibration procedures in this Data Package. Any other test equipment meeting the specifications listed in Paragraph 3-3 may be substituted in place of the recommended models.

3-2 CALIBRATION PROCEDURES

It is assumed that the RD-301 Test Set is properly operating (except for final calibration) prior to performing the following calibration procedures. A check for proper operation, front panel control settings and repair of any malfunctions should be performed before continuing with the calibration procedures. Each separate test procedure initiates a test set-up, unless otherwise specified.

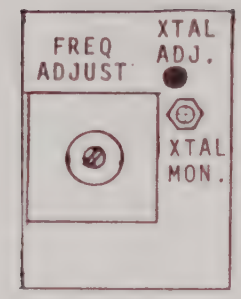

VIEW "A-A"

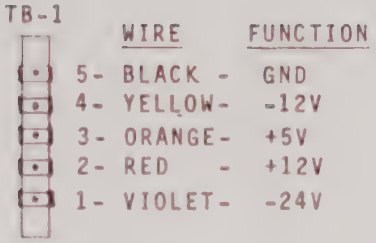

DETAIL "B"

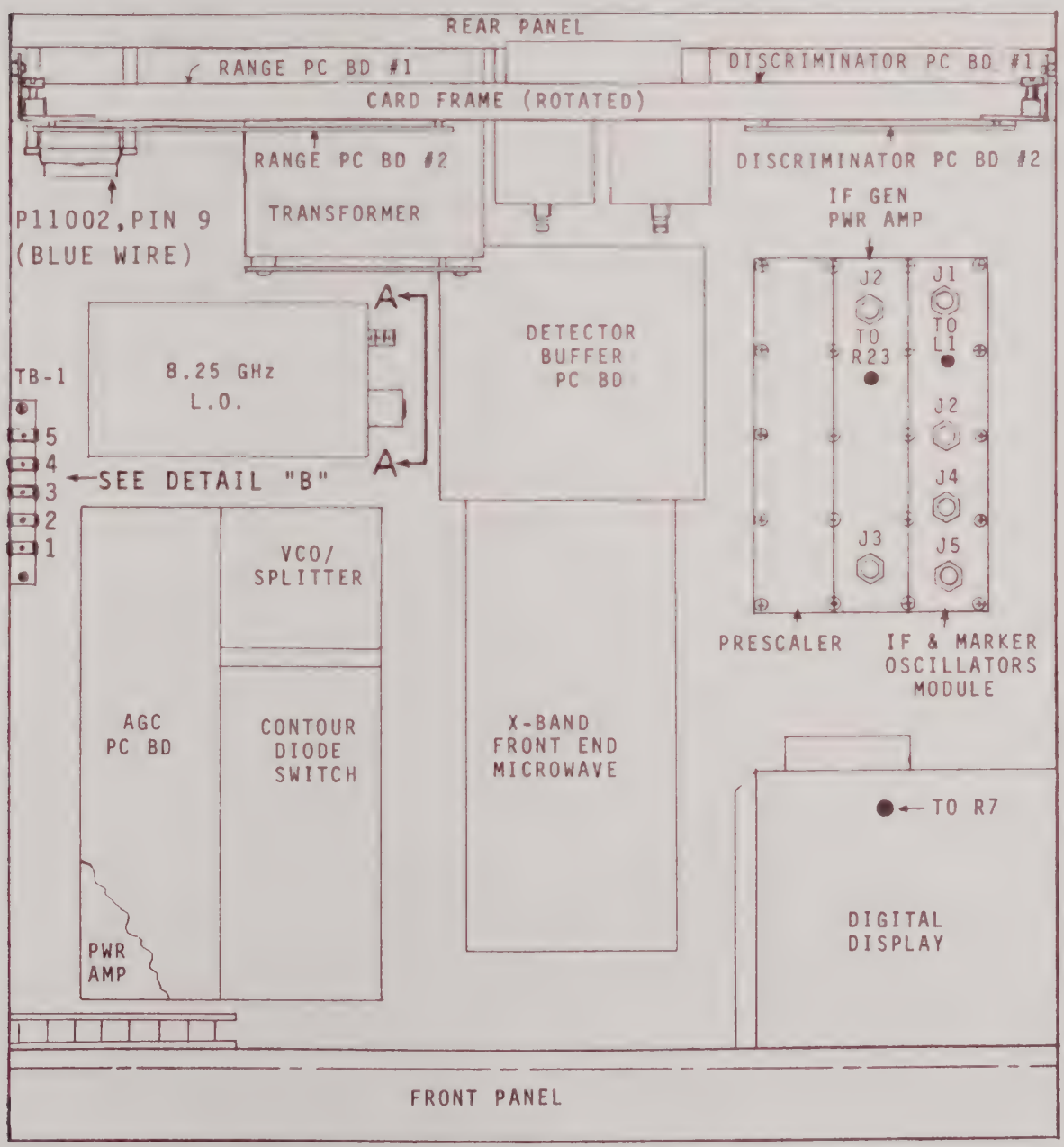

Figure 3-1 RD-301 Internal Structure

CALIBRATION PROCEDURE: METER MECHANICAL ZERO CHECK AND ADJUSTMENT

PREREQUISITE: None

SPECIAL ACCESSORY EQUIPMENT REQ'D: Small Screwdriver

TEST SET-UP DIAGRAM: None

STEP	PROCEDURE
1.	Test Set power is OFF.
2.	Verify PANEL METER (34) needle at Ø on scale.
3.	If needle is not Ø, turn small screwdriver in appropriate direction to PANEL METER ZERO Control (35) to zero the meter.

CALIBRATION PROCEDURE: INITIAL PROCEDURE

PREREQUISITE: Paragraph 3-2-1

SPECIAL ACCESSORY EQUIPMENT REQ'D: Digital Voltmeter

TEST SET-UP DIAGRAM: None

STEP	PROCEDURE
1.	Disconnect power cable from RD-301 Test Set.
2.	Remove RD-301 top cover.
3.	Set up Digital Voltmeter to verify following steps.

NOTE:

Two 5-pin Molex connectors are tied together on top of T-1 transformer: one is marked for 110 VAC, the other is marked for 220 VAC. Insert the applicable connector to receptacle on top of transformer to match the external power to be used.

4. Verify the 50 Hz to 400 Hz power source is 117 VAC (±11.7 VAC), or 234 VAC (±16 VAC) when RD-301 is wired for the alternate voltage. Record measured value.

5. Connect RD-301 to 117/234 VAC, 50 to 400 Hz power source and press LINE Switch (22) ON. Allow 15 minutes warm-up time before proceeding with calibration procedures.

CALIBRATION PROCEDURE: POWER SUPPLY VOLTAGE TEST

PREREQUISITE: Paragraph 3-2-2

SPECIAL ACCESSORY EQUIPMENT REQ'D:
1 Digital Voltmeter
1 Oscilloscope

TEST SET-UP DIAGRAM:

STEP	PROCEDURE

1. Use Digital Voltmeter and Oscilloscope to measure and record voltages and ripple voltages at Test Points listed below (see Figure 3-1 Detail "B" for location of Test Points).

TEST POINT	VOLTAGE	RIPPLE VOLTAGE
TB-1-5	GND	N/A
TB-1-3	(+4.7_____ +5.3 VDC)_____	(15 mV p-p Max)
TB-1-2	(+11.4_____ +12.6 VDC)_____	(15 mV p-p Max)
TB-1-4	(-11.4_____ -12.6 VDC)_____	(15 mV p-p Max)
TB-1-1	(-22.0_____ -25.2 VDC)_____	(20 mV p-p Max)
High Voltage*	(+155 _____ +180 VDC)_____	N/A

*(Rear Panel, P11002, Pin 9)

CALIBRATION PROCEDURE: 100 MHz CLOCK/8.25 GHz LO

PREREQUISITE: Paragraph 3-2-2

SPECIAL ACCESSORY EQUIPMENT REQ'D: 1 Frequency Counter

TEST SET-UP DIAGRAM: None

STEP PROCEDURE

3-2-4a 100 MHz CLOCK

1. Connect RF Frequency Counter to TP1 on Range Board No. 1, P.C. Assy Board (See Section 5). Set Miles/µSec switch to µSec.

2. Adjust L-2 to 100 MHz (±5000 Hz).

3. Set Miles/µSec switch to MILES Mode.

4. Verify the 8.09133 MHz Oscillator is operating (±10 Hz).

3.2.4b 8.25 GHz LO (See Figure 3-1, View "A-A")

1. Connect Frequency Counter to XTAL MON connection on right side of LO.

2. Set the frequency to 103.125 MHz and allow it to stabilize for 15 minutes. If needed, adjust XTAL ADJ to a setting within tolerance (±2.1 kHz).

CALIBRATION PROCEDURE: IF AND MARKER OSCILLATORS CALIBRATION

PREREQUISITE: Paragraph 3-2-2

SPECIAL ACCESSORY EQUIPMENT REQ'D:
1 Frequency Counter
1 Digital Voltmeter
1 Spectrum Analyzer

TEST SET-UP DIAGRAM:

STEP	PROCEDURE

3-2-5a MARKER OSCILLATOR ADJUSTMENT

1. Disconnect power from RD-301.
2. Disconnect coaxial cables from J-2, J-4 and J-5 of IF and MKR Oscillator Module (Figure 3-1).
3. Remove screws from top cover of IF and MKR Oscillator Module before removing IF/MKR Oscillators Board from housing. Support board on extender brackets or lay on cardboard for insulation.
4. Connect Frequency Counter to J-5 on IF and Marker Oscillators Board.
5. Apply power to RD-301.
6. Press DISPLAY MKR Switch (14) and set MKR FREQ Control (12) full cw.
7. Adjust C-34 on IF and Marker Oscillators Board (See Section 5) until Frequency Counter indicates $\geq$77 MHz.
8. Allow 20 minutes for the counter to stabilize at a frequency between 72 and 74 MHz.
9. If necessary, adjust C-34.
10. While pressing DISPLAY MKR Switch (14), rotate MKR FREQ Control (12) completely ccw. Verify Frequency Counter reading is between 17 and 19 MHz (no adjustment available).

3-2-5b IF OSCILLATOR TUNE CIRCUIT ADJUSTMENT

1. Disconnect power from RD-301.
2. Connect Frequency Counter to J-4 on IF and MKR Oscillator Module (Figure 3-1).
3. Connect Oscilloscope, DC Coupled to IF OSC Tune Line (Coax 20).
4. Apply power to RD-301. Select IF HI on RF/IF MODE (10).
5. Rotate outer knob (coarse) of MNL FREQ Control (8) cw to maximum position.
6. Set R-44 on AGC PC Board to -18 V.
7. Rotate MNL FREQ Control (8) ccw and adjust R37 on AGC PC Board to -2.0 V.
8. Repeat Steps 5 through 7 to calibrate -2 V to -18 V on Tune Line.
9. Adjust MNL FREQ Control (8) fully cw and adjust L-1 on IF and MKR Oscillator Board (Figure 3-1) ≈71.5 MHz (±.5 MHz) on Frequency Counter.
10. Rotate MNL FREQ Control (8) (coarse knob) ccw to minimum position.
11. Verify ≈18.5 MHz on Frequency Counter.
12. Because of interaction between R-44 and R-37, Steps 5 through 7 of 3-2-5b (IF Oscillator Tune Circuit Adjustment) should be repeated as necessary, to obtain a frequency span wide enough to cover the 20 to 70 MHz requirements of the IF Oscillator Tune circuit. The minimum frequency should be ≈18.5 MHz and maximum frequency should be ≈71.5 MHz.
13. Disconnect Digital Voltmeter.

3-2-5c MIXER BALANCE ADJUSTMENT

STEP PROCEDURE

1. Connect Spectrum Analyzer to J-2 on IF and Marker Oscillators Board (Figure 3-1).

2. Set Spectrum Analyzer controls to:

   60 MHz Center Frequency
   10 MHz/DIV Span Width
   20 dB/RF Attenuation
   10 dB/DIV Log Display

3. Set MNL FREQ Control (8) to obtain 60 MHz analyzer display.

4. Adjust Mixer Balance potentiometer (R24) on IF and Marker Oscillators Board (see Section 5) for maximum 60 MHz signal and minimum spurious signals.

4-2-5d MARKER LEVEL CHECK

1. Press DISPLAY MKR Switch (14) and rotate MKR FREQ Control (12) until marker frequency is close to 60 MHz IF carrier on analyzer display.

2. Marker frequency should be from -30 dBc to -20 dBc. If not, select resistor of appropriate value for R-36 on IF and Marker Oscillators Board to obtain value within this range.

3. Release Display MKR Switch (14).

4. Rotate MNL FREQ Control (8) until Frequency Counter indicates 30 MHz.

5. Set Spectrum Analyzer to 30 MHz.

6. Press DISPLAY MKR Switch (14) and rotate MKR FREQ Control (12) until marker frequency is close to the 30 MHz IF carrier on analyzer display.

7. Marker frequency should be between -24 dBc and -18 dBc. If not, select resistor of appropriate value for R-36 on IF and Marker Oscillators Board, to obtain this value.

STEP PROCEDURE

3-2-5e SWEEP WIDTH ADJUSTMENT

1. Set Spectrum Analyzer to carrier frequency (30 MHz) at 0.5 MHz span width.

2. Set sweep speed to 50 mS/DIV.

3. Verify carrier just starts to sweep when SWEEP WIDTH MHz Control (25) dial is just >Ø.

4. If necessary, to reset dial:

   - Remove dial.
   - Rotate control shaft until carrier just begins to sweep.
   - Without rotating control, replace dial so index mark is aligned with Ø and tighten two set screws.

5. Set SWEEP WIDTH MHz control (25) to 4 MHz.

6. Adjust SWEEP WIDTH Potentiometer (R-7) on Counter Boards for swept carrier display of 8.0 divisions (4 MHz p-p). (Access to R-7 is through hole in top of Digital Display Assembly, See Figure 3-1).

7. Set SWEEP WIDTH MHz Control (25) to 2 MHz.

8. Analyzer should indicate swept carrier of 4.0 divisions (±10%).

9. If necessary, adjust R-7 until swept carrier at 2 and 4 MHz is within 10% of dial setting.

10. Disconnect test equipment and power from RD-301 and reinstall IF and Marker Oscillators Board. Connect coaxes.

CALIBRATION PROCEDURE: PRESCALER AND COUNTER TEST

PREREQUISITE: Paragraph 3-2-5

SPECIAL ACCESSORY EQUIPMENT REQ'D: 1 Frequency Counter

TEST SET-UP DIAGRAM: None

STEP PROCEDURE

1. Set the following RD-301 controls to the indicated settings:

CONTROL	SETTING
RF/IF Switch (10)	IF HI
PRF/RF Switch (2)	RF

2. Connect Frequency Counter to IF OUT Connector (9).

3. Adjust OUTPUT LEVEL COARSE dBm Control (5) for adequate counter reading.

4. RD-301 Digital Display (1) should match Counter Frequency reading.

5. Rotate MNL FREQ Controls (8) to verify Digital Display (1) indicates increasing frequency with cw rotation and decreasing frequency with ccw rotation.

6. Press DISPLAY MKR Switch (14) and hold down.

7. Rotate MKR FREQ Controls (12) to verify Digital Display (1) indicates increasing frequency with cw rotation and decreasing frequency with ccw rotation.

CALIBRATION PROCEDURE: IF GENERATOR POWER AMPLIFIER CHECK AND ADJUSTMENT

PREREQUISITE: Paragraph 3-2-5

SPECIAL ACCESSORY EQUIPMENT REQ'D: 1 Spectrum Analyzer

TEST SET-UP DIAGRAM: None

STEP	PROCEDURE

1. Set the following RD-301 controls to the indicated settings:

CONTROL	SETTING
RF/IF Switch (10)	HI
MODULATION Switches (19)	CW
OUTPUT LEVEL COARSE (5)	0 dBm

2. Connect Spectrum Analyzer to RD-301 IF OUT Connector (9).

3. Rotate MNL FREQ Control (8) to select 30 MHz.

4. Spectrum Analyzer should indicate 0 dBm (±2.5 dB). If not, adjust R-23 (via access hole in IF Gen. Pwr. Amp. Module; see Figure 3-1) until this value is obtained.

5. Rotate MNL FREQ Control (8) to select 60 MHz.

6. Spectrum Analyzer should indicate 0 dBm (±2.5 dBm). If not, adjust R-23 to obtain optimum value.

3-2-8

CALIBRATION PROCEDURE: X-BAND GENERATOR TUNE RANGE*

PREREQUISITE: Paragraph 3-2-2

SPECIAL ACCESSORY EQUIPMENT REQ'D: None

TEST SET-UP DIAGRAM: None

STEP	PROCEDURE

1. Set the following RD-301 controls to the indicated settings:

CONTROL	SETTING
PRF RF (2)	RF
RF/IF Switches (10)	MNL

2. Verify Digital Display (1) range from 9295 MHz (or less) to 9500 MHz (or more) by rotating MNL FREQ Controls (8) completely ccw and cw.

3. Set MNL FREQ Controls (8) to full cw position.

4. Adjust R-35 (GAIN potentiometer) on AGC PC Board (see Section 5) until Digital Display (1) indicates 9504 MHz (±1 MHz).

5. Set MNL FREQ Controls (8) to full ccw position.

6. Adjust R-39 (OFFSET potentiometer) on AGC PC Board, to 9291 MHz.

7. Repeat Steps 3 through 6 until MNL FREQ range limits are from 9291 MHz to 9504 MHz.

CALIBRATION PROCEDURE: IF ON/OFF RATIO TEST

PREREQUISITE: Paragraph 3-2-7

SPECIAL ACCESSORY EQUIPMENT REQ'D: Spectrum Analyzer

TEST SET-UP DIAGRAM: None

STEP PROCEDURE

1. Set the following RD-301 controls to the indicated settings:

CONTROL	SETTING
RF/IF Switches (10)	IF HI
OUTPUT LEVEL COARSE (5)	+20 dBm
MODULATION Switches (19)	CW
PRF/RF (2)	RF
MNL FREQ (8)	30 MHz

2. Connect Spectrum Analyzer to IF OUT Connector (9).

3. Measure power level on Spectrum Analyzer. Set reference.

4. Change MODULATION Switch (19) to EXT (+). Do not apply external trigger.

5. Measure power level on Spectrum Analyzer.

6. IF ON/OFF ratio is difference between ON Level (Step 3) and OFF Level (Step 5). ON/OFF ratio should be greater than 58 dB.

7. Set MNL FREQ Control (8) to 60 MHz.

8. ON/OFF Ratio should be greater than 50 dB.

CALIBRATION PROCEDURE: MAIN LEVELER AND CONTOUR LEVELER

PREREQUISITE: Paragraph 3-2-7

SPECIAL ACCESSORY EQUIPMENT REQ'D:
1 Power Meter
1 N-Type 10 dB Pad
1 Bandpass Filter

TEST SET-UP DIAGRAM: None

STEP PROCEDURE

1. Set the following RD-301 controls to the indicated settings:

CONTROL	SETTING
MODULATION Switches (19)	CW
RF/IF (10)	MNL
OUTPUT LEVEL COARSE (5)	-50
OUTPUT LEVEL FINE (4)	Ø
CONTOUR R2/dB (3)	Ø
PRF/RF (2)	RF
RNG SEL (31)	RING 1

2. Connect serialized coax cable to RF I/O connector (11) and to Power Meter through N-Type 10 dB Pad and Bandpass Filter.

3. Rotate MNL FREQ Controls (8) to set Digital Display (1) at 9350 MHz.

4. Adjust R-1 on AGC PC Board (see Section 5) to display -40 dBm plus coupler adjustment value (i.e., mean value of coupler furnished with RD-301 minus 20 dB) on Power Meter.

5. Vary MNL FREQ Control (8) from 9300 to 9500 MHz. Record the power level for reference.

6. Set OUTPUT LEVEL COARSE Control (5) to -60 dBm and record power level for reference.

7. Set the following RD-301 controls to the indicated settings:

CONTROL	SETTING
OUTPUT LEVEL COARSE (5)	-70 dBm
CONTOUR R2/dB (3)	+10 dB
RNG SEL (31)	CONTOUR

STEP	PROCEDURE

8. Adjust R2 on AGC PC Board, until power level equals reference level of Step 7.

9. Set the following RD-301 controls to the indicated settings:

CONTROL	SETTING
OUTPUT LEVEL COARSE (5)	-80 dBm
CONTOUR/R2 dB (3)	+20 dBm

10. Verify level remains same as reference level of Step 6.

11. Reduce CONTOUR/R2 dB Control (3) to +10 dB; then increase in 1 dB steps to verify performance of this control.

CALIBRATION PROCEDURE: INTERNAL PRF CONTROL DIAL CALIBRATIONS

PREREQUISITE: Paragraph 3-2-4

SPECIAL ACCESSORY EQUIPMENT REQ'D: None

TEST SET-UP DIAGRAM: None

STEP	PROCEDURE

1. Set the following RD-301 controls to the indicated settings:

CONTROL	SETTING
MODULATION Switches (19)	INTL
PRF/RF (2)	PRF
X1/X10 INTL PRF (33)	X1

2. Rotate INTL PRF Control (32) ccw to minimum setting and verify dial is aligned to 50. (If not, loosen set screws and realign dial.)

3. With INTL PRF Control (32) at 50, verify Digital Display (1) of 50 (±2 Hz).

4. If requirement of Step 3 is not met, adjust 50 Hz ADJ at R-74 on Range Board #2 (see Section 5) until Digital Display (1) indicates 50 (±2 Hz).

5. Rotate INTL PRF Control (32) to 500 and verify Digital Display (1) of 500 (±5 Hz).

6. If requirement of Step 5 is not met, adjust 500 Hz ADJ at R-79 on Range Board #2 until Digital Display indicates 500 (±5 Hz).

7. Leaving INTL PRF control (32) at 500, switch X1/X10 INTL PRF Switch (33) to X10. Verify Digital Display (1) of 5000 (±10%). (No adjustment).

8. Leaving X1/X10 INTL PRF Switch (33) at X10, dial down to 50 on INTL PRF Control (32). Verify Digital Display (1) of 500 (±10%). (No adjustment).

CALIBRATION PROCEDURE: DISCRIMINATOR FILTER ADJUSTMENT

PREREQUISITE: Paragraph 3-2-2

SPECIAL ACCESSORY EQUIPMENT REQ'D:
1 Tracking Generator
1 Spectrum Analyzer

TEST SET-UP DIAGRAM: None

NOTE:

At time of initial calibration, or when circuit performance indicates maladjustment, filter adjustment is required. Adjustments of filters may be initiated with covers removed. Final adjustments must be made with covers in place.

STEP	PROCEDURE
1.	Connect a Tracking Generator to "Input" of Filter and a Spectrum Analyzer to "Output". Adjust filters as specified in Figures 3-4A, 3-4B and 3-4C.
2.	Refer to Figure 3-2. Filters A (475 MHz Filter) and B (Bandpass Filter) are located on bottom of Discriminator Board No. 1. Both are not bi-directional.
3.	For Filter A, remove semi-rigid coaxes from Filter A and connect Analyzer and Generator for readings.
4.	For Filter B, remove semi-rigid coaxes from Filter B and connect Analyzer and Generator for readings.
5.	For Filter C (Presence of Signal Filter), Generator should be connected to J-13 (Input), and Analyzer connected to TP-7 (Output) for readings (Figure 3-3).

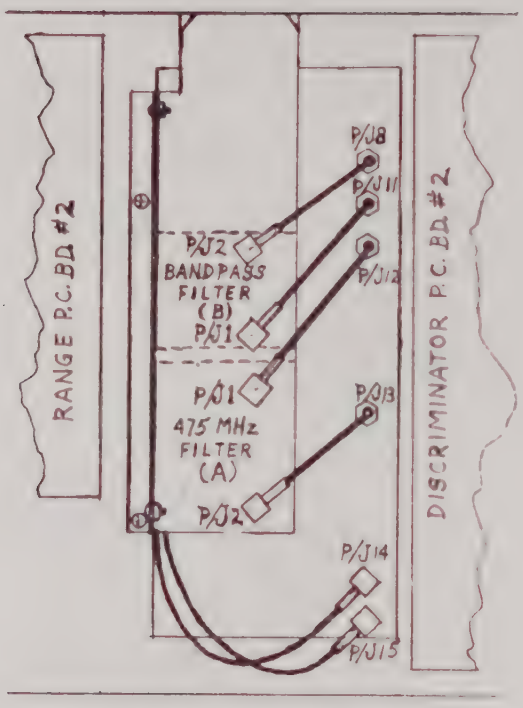

Figure 3-2 Filter Test Locations, 475 MHz Filter (A) and 570-775 MHz Bandpass Filter (B)

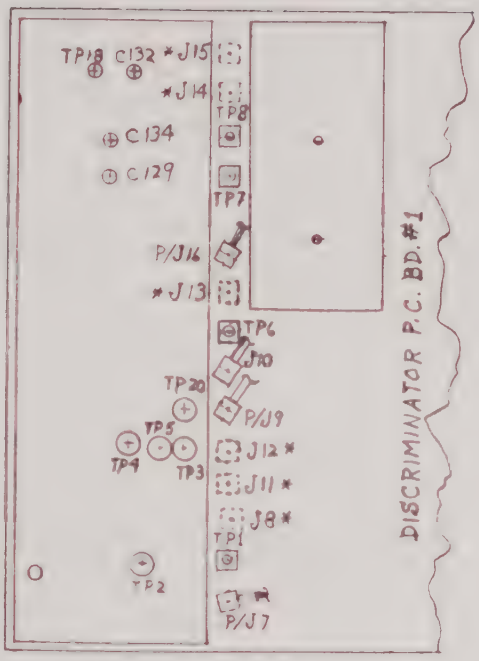

Figure 3-3 Top Of Discriminator P.C. Board #1
*(Opposite end of connector shown in Figure 3-2)

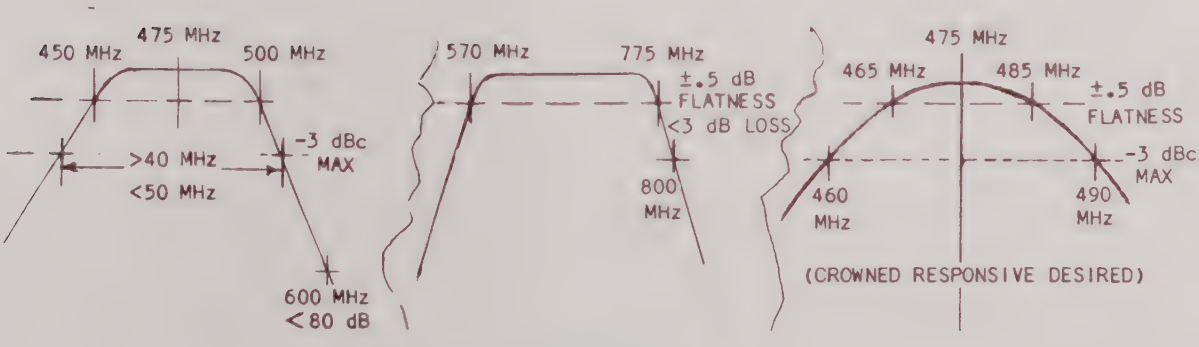

A
475 MHz FILTER

B
BANDPASS FILTER

C
PRESENCE OF SIGNAL FILTER

Figure 3-4 Filter Signal Representations

CALIBRATION PROCEDURE: DISCRIMINATOR

PREREQUISITE: Paragraph 3-2-2

SPECIAL ACCESSORY EQUIPMENT REQ'D:

1 External D.C. Supply
1 Spectrum Analyzer
1 Calibrating RF Pulse Generator
1 Tracking Generator
1 Oscilloscope
1 L-Band Sweep Generator
1 RF Counter

TEST SET-UP DIAGRAM:

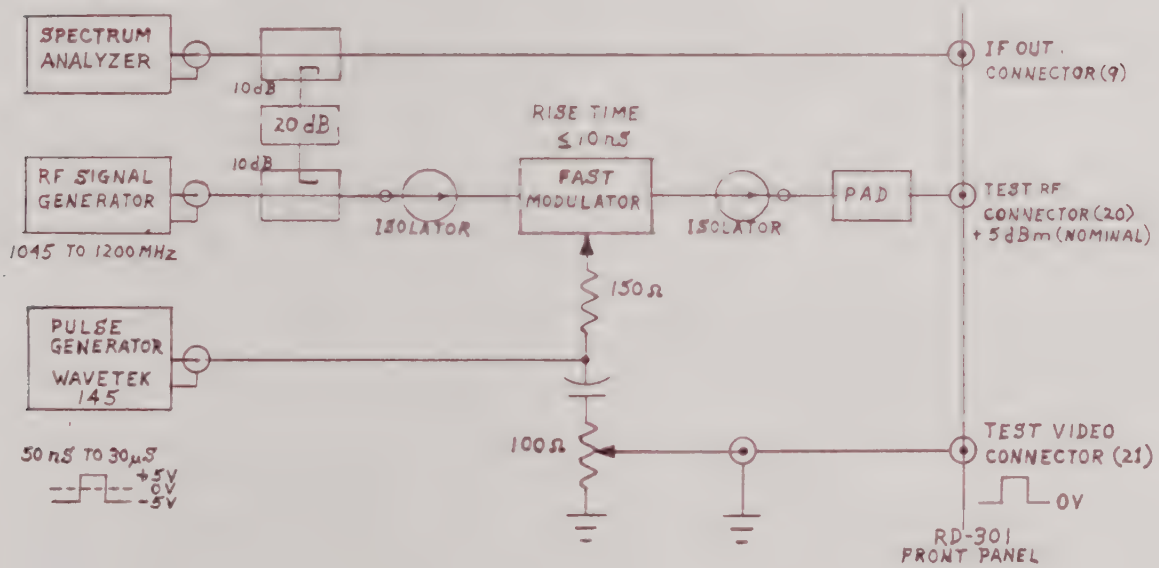

Figure 3-5 Discriminator Test Set-Up Diagram

NOTE:

When connecting the RF Pulse Generator to the RD-301 TEST RF Connector (20), the RF waveform must be delayed 3 nS from the video waveform, measured at the RD-301 front panel (see Figure 3-6).

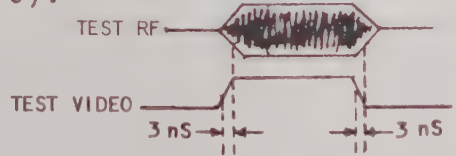

Figure 3-6 TEST RF/TEST VIDEO Waveforms

NOTE:

Test set-up remains the same in all steps of 3-2-13, unless otherwise noted.

STEP PROCEDURE

PREALIGNMENT

1. Set the following RD-301 controls to the indicated settings:

CONTROL	SETTING
RF/IF Switches (10)	MNL
MODULATION Switches (19)	TRACK

2. Use external D.C. supply. Apply ≈2.0 V to TP-10 on Discriminator Board No. 1 (see Section 5).

3. Connect Spectrum Analyzer to TP-1. Verify the 475 MHz Oscillator is operating ≈-30 dB.

4. Adjust C54 ≈475 MHz.

5. Move Analyzer connection to TP-2. Use MNL FREQ Controls (8) to sweep VCO across its range (stop to stop). Verify Difference Frequency from 570 MHz to 800 MHz ≈-35 dB.

6. Move Analyzer to TP-3. Using MNL FREQ Controls (8) to sweep VCO, verify Difference Frequency from 570 MHz to 800 MHz ≈-39 dB. The Bandpass Filter should have attenuated signals outside this range.

7. Move Analyzer to TP-4. Sweep MNL FREQ Controls (8), again, to verify Difference Frequency amplified ≈-32 dB.

8. Move Analyzer to TP-5. Apply Pulse Generator signal (TTL) to TEST VIDEO Connector (21) on Front Panel. Connect Calibrating RF Pulse Generator test signal to RD-301 at TEST RF Connector (20) (see Figure 3-5 and associated NOTE for set-up details). Apply 1100 MHz pulsed signal from Calibrating RF Pulse Generator. Verify 475 MHz reference pulse ≈-40 dB.

9. Adjust MNL FREQ Controls (8) to align real 475 MHz pulse with reference 475 MHz pulse on Spectrum Analyzer display. Pulses should be ≈3 dB apart.

NOTE:

On fully operational RD-301, track LED should now light and signal presence should occur (TP-15) (see Figure 3-7).

Figure 3-7 Presence of Signal

STEP	PROCEDURE

10. Move Spectrum Analyzer to TP-6. Verify reference and real 475 MHz pulses appear ≃-50 dB, and signals within 25 MHz are attenuated (≤80 dB).

11. Disconnect coax from 475 MHz Filter, J1 Input in Figure 3-2. Connect L-Band Sweep Generator to this connection.

12. Sweep from 400 MHz to 600 MHz. Verify output shape at TP-6 (see Figure 3-4A).

13. Move analyzer to TP-18. Check compression level through limiter stages.

S-CURVE ALIGNMENT (Figure 3-8)

14. Connect Sawtooth from Sweep Generator into DC X-Input (Horizontal) of Oscilloscope.

15. With Oscilloscope in X-Mode, calibrate Generator for reference dot, centered on display.

16. Manually tune Sweep Width from 450 MHz to 500 MHz to obtain full scale deflection. Verify 475 MHz display at center of display.

17. Connect RF output of Sweep Generator to J-13 at -30 dBm.

18. Connect DC Y-Input (vertical) of Oscilloscope to RD-301 DSCRM Connector (6). Terminate with 50Ω.

19. Adjust R-158 Discriminator Board #1 (see Section 5) for zero volts deflection. Manually sweep generator to 485 MHz.

20. Adjust Discriminator Gain (R182) for -1 V.

21. Manually sweep to 465 MHz and verify +1 V reading. Return to 475 MHz.

22. Place Sweep Generator in Sweep Mode. Single "S-Curve" should appear on scope display (see Figure 3-8).

23. Adjust scope vertical gain for full scale deflection of displayed signal. "S-Curve" should be centered on zero crossing and symmetrical (±1.6" of delay line ±≈5 MHz).

NOTE:

C-132 may be adjusted to obtain a symmetrical curve.

24. Adjust Discriminator Gain (R-182) for fine adjustment, as needed.

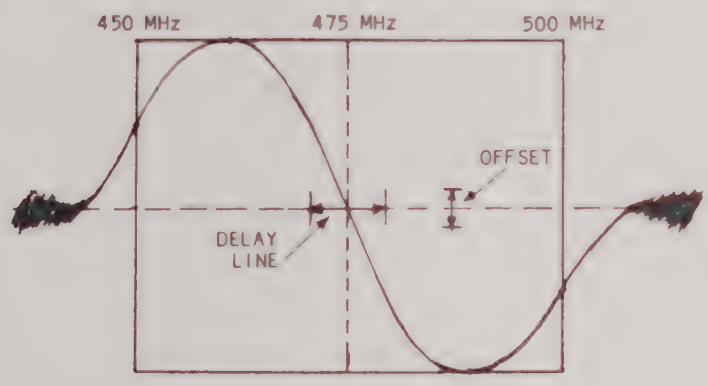

Figure 3-8 S-Curve

NOTE:

SWEEP (sawtooth) must be linear, i.e., voltage vs. frequency. If sweep (sawtooth) of L-Band Generator is not linear, the following may be done: Use Tektronix 7L13 in 7313 frame and Tektronix TR502 in TM503 frame. Use sawtooth from 7L13 and TR502 as RF source. Connect Aux RF out of TR502 to RF Counter. Set scan of 7L13 to 5 mS/DIV and Freq Span to 5 MHz/DIV.

3/4-WIDTH PULSE DISPLAY

25. To verify 3/4-Width Pulse Circuit is working, use Dual Trace Oscilloscope.

26. Connect Channel A to TP-14.

27. Connect Channel B to TP-16.

28. Adjust Pulse Generator for positive pulses with base line at 0 V, Pulse Width of 5 µS and PRF of 1 kHz. Adjust peak of positive video pulses on RD-301 PANEL Meter (34) to 1 kW.

NOTE:

Test video ≈3 V.

29. Vary Pulse Generator from .2 µS to 40 µS.

30. Channel B should present pulse display, 3/4-width of Channel A Pulse, and delay of 12 nS (Figure 3-14).

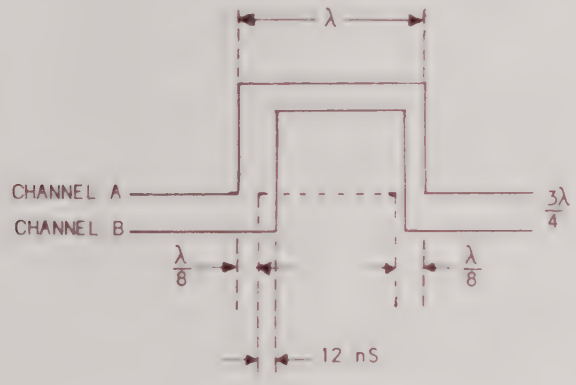

Figure 3-9 3/4-Width Pulse

31. Verify 80 MHz Oscillator at Pin 3 of U1 on Discriminator Board #2 (±10 MHz) (see Section 5).

AUTO POINT

32. Connect coax between DET and Channel A of Oscilloscope, terminate into 50Ω. Connect a second coax between DLYD SYNC and Channel B of Oscilloscope.

33. Set the following RD-301 controls to the indicated settings:

CONTROL	SETTING
RNG SEL	R1,R2/AUTO
RANGE 1 DELAY	2 µS
RANGE 2 DELAY	10 µS
R1 PULSE WIDTH	5 µS
R2 PULSE WIDTH	10 µS
MODULATION	TRACK

34. Set the Video Generator Pulse Width to .4 µS to Channel A of Oscilloscope.

NOTE:

The Auto Point may be adjusted from 0.2 µS to 1 µS, as required.

STEP PROCEDURE

35. Adjust R-12 on Discriminator Bd No. 1 fully cw, then slowly ccw until displayed pulse just changes.

36. Adjust Video Generator above and below 0.4 µS to verify switching at 0.4 µS (±0.05 µS).

NOTE:

≈2.0 V applied to TP-10 from external DC supply should now be removed.

PULSE PERIOD OFFSET ADJUSTMENT

37. Provide Pulse Generator Signal at TEST VIDEO Connector (21).

38. Connect calibrating RF Pulse Generator to TEST RF Connector (20).

39. Monitor TP-11 on Discriminator Bd No. 1 (See Section 5) with Oscilloscope probe.

40. Apply 3 µS pulse. Adjust reference sample pulse period to be co-linear with noise line (see Figure 3-10), using R-60.

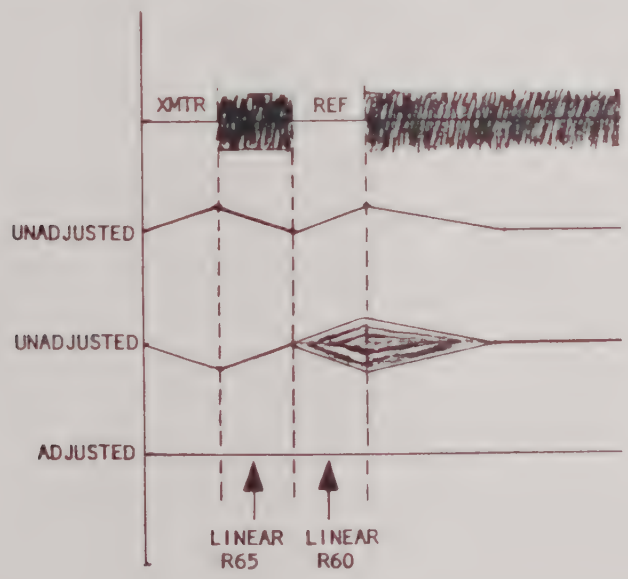

Figure 3-10 Co-linear Pulse and Noise Line

41. Adjust transmitter sample pulse period to be co-linear with noise line, using R-65. Verify pulse period for pulse width from 50 nS to 30 µS.

42. Connect RF Counter to TP-1 to 475 MHz Oscillator on Discriminator Bd. No. 1 (see Figure 3-3). Use R-158 if fine adjustment is required.

STEP PROCEDURE

TRACKING ACCURACY

43. Vary Calibrating Generator frequency in 10 MHz increments from 9295 MHz to 9500 MHz to verify Tracking Accuracy. Check response at each step for wide-through-narrow pulses (30 µS to 50 nS).

ΔF OFFSET

44. Set frequency of calibrating RF Pulse Generator to 9375 MHz.

45. Set the following RD-301 controls to the indicated settings:

CONTROL	SETTING
MTR FCTN Switch (36)	ΔF
ΔF OFFSET (37)	CAL (Detent)

46. Adjust R-69 on Discriminator Board No. 1 (see Section 5) to zero PANEL Meter (34).

47. Turn ΔF OFFSET Control (37) cw out of detent, until frequency on Digital Display (1) reads 9375 MHz.

48. Adjust R-90 on Discriminator Bd No. 1 to zero Panel Meter (34).

49. Continue to move ΔF OFFSET Control (37) cw to -0.50 MHz on Panel Meter (34). Adjust R-77 for Digital Display (1) of 9375.50 MHz.

50. Continue to move ΔF OFFSET Control cw to -0.50 MHz on Panel Meter (34). Digital Display should be 9375.50.

51. Verify Digital Display (1) can be varied (+) or (-) from a 9375 MHz "zero" by the amount displayed on Panel Meter (34). Adjust as needed.

CALIBRATION PROCEDURE: PULSE WIDTH (RANGE 1)

PREREQUISITE: Paragraph 3-2-4

SPECIAL ACCESSORY EQUIPMENT REQ'D:
1 Heterodyne Device
1 X-Band to L-Band Down Converter
1 L-Band Generator

TEST SET-UP DIAGRAM: None

STEP PROCEDURE

1. Down convert the output of RF I/O connector (11) from X-Band to L-Band and take output through Heterodyne device (connected to L-Band Generator).

2. Connect Oscilloscope to synchronize Heterodyne device with signal output.

3. Set the following RD-301 controls to the indicated settings:

CONTROL	SETTING
RANGE 1 DELAY (29)	000.3
RANGE 2 DELAY (30)	900.0
INTL PRF (32)	150 Hz
RNG SEL (31)	1 RING
MODULATION Switches (19)	INTL
RF/IF Switches (10)	MNL
PULSE WIDTH MULTIPLIER (RG1) (26)	.1
PULSE WIDTH (RG1) (23)	.5
µS/NM Switch (28)	µS

4. On Range Board #2 (see Section 5), adjust R22 for .05 µS width.

5. Change the following controls:

PULSE WIDTH MULTIPLIER (RG1) (26)	1
PULSE WIDTH (RG1) (23)	.5

6. Adjust R21 on Range Board #2 for .5 µS width.

7. Change the following controls:

PULSE WIDTH MULTIPLIER (RG1) (26)	100
PULSE WIDTH (RG1) (23)	5

STEP	PROCEDURE
8.	Adjust R10 on Range Board #2 for 500 µS width.
9.	Select each value on PULSE WIDTH MULTIPLIER (RG1) (26). Verify pulse width typically stays within 10% of the settings of PULSE WIDTH Control (RANGE 1) (23).

CALIBRATION PROCEDURE: PULSE WIDTH (RANGE 2)

PREREQUISITE: Paragraph 3-2-4

SPECIAL ACCESSORY EQUIPMENT REQ'D:
1 Heterodyne Device
1 X-Band to L-Band Down Converter
1 L-Band Generator

TEST SET-UP DIAGRAM: None

STEP PROCEDURE

1. Down convert output of RF I/O Connector (11) from X-Band to L-Band and take output through Heterodyne device (connected to L-Band Generator).

2. Connect Oscilloscope to synchronize Heterodyne device with signal output.

3. Set the following RD-301 controls to the indicated settings:

CONTROL	SETTING
RANGE 1 DELAY (29)	900.00
RANGE 2 DELAY (30)	000.3
INTL PRF (32)	150 Hz
RNG SEL (31)	2 ON
MODULATION Switches (19)	INTL
RF/IF Switches (10)	MNL
PULSE WIDTH MULTIPLIER (RG2) (27)	.1
PULSE WIDTH (RG2) (24)	.5
µS/NM Switch (28)	µS

4. Adjust R42 on Range Board #2 for .05 µS width.

5. Change the following RD-301 control settings:

CONTROL	SETTING
PULSE WIDTH MULTIPLIER (RG2) (27)	1
PULSE WIDTH (RG2) (24)	.5

6. Adjust R41 on Range Board #2 for .5 µS width.

STEP	PROCEDURE

7. Change the following RD-301 control settings:

CONTROL	SETTING
PULSE WIDTH MULTIPLIER (RG2) (27)	100
PULSE WIDTH (RG2) (24)	5

8. Adjust R31 on Range Board #2 for 500 µS width.

9. Select each value on PULSE WIDTH MULTIPLIER (RG2) (27). Verify pulse width typically stays within 10% of settings of PULSE WIDTH Control (RANGE 2) (24).

CALIBRATION PROCEDURE: PULSE RANGE DELAY SWITCHES

PREREQUISITE: Paragraph 3-2-14
Paragraph 3-2-15

SPECIAL ACCESSORY EQUIPMENT REQ'D:
1 Oscilloscope
1 Heterodyne Device
1 X-Band to L-Band Down Converter
1 L-Band Generator

TEST SET-UP DIAGRAM: None

STEP PROCEDURE

1. Set the following RD-301 controls to the indicated settings:

CONTROL	SETTING
RANGE 1 DELAY (29)	900.00
INTL PRF (32)	150 Hz
RNG SEL (31)	R2 ON
MODULATION Switches (19)	INTL
RF/IF Switches (10)	MNL
PULSE WIDTH MULTIPLIER (RG2) (27)	.1
PULSE WIDTH (RG2) (24)	.5
µS/NM Switch (28)	µS
RANGE 2 DELAY (30)	000.2 µS

2. Adjust R-47 on Range Board No. 1 (see Section 5) to 0.6 µS pulse display on Oscilloscope.

3. Connect Oscilloscope to down-converted heterodyne device signal.

4. Step through the 0.1 µS positions on RANGE 2 DELAY Thumbwheels (30) and verify .1 through .9 µS range delay. Repeat this step for 1 µS, 10 µS and 100 µS positions of RANGE 2 DELAY Thumbwheel Switches (30).

5. Change the following RD-301 Control settings:

CONTROL	SETTING
RANGE 1 DELAY (29)	000.3
RANGE 2 DELAY (30)	900.0
RNG SEL (31)	1 Ring

STEP	PROCEDURE

6. Repeat step 4 using the RANGE DELAY Thumbwheel Switches (29), to verify proper operation.

7. Change the following RD-301 Control settings:

CONTROL	SETTING
RANGE 1 DELAY (29)	900.00
RANGE 2 DELAY (30)	000.3
RNG SEL (31)	2

8. Step RNG SEL Switch (31) from RING 1 through RING 5. Verify, at each setting, RANGE 1 reply repeats at appropriate intervals.

CALIBRATION PROCEDURE: RF ON/OFF RATIO

PREREQUISITE: Paragraph 3-2-10

SPECIAL ACCESSORY EQUIPMENT REQ'D:
1 X-Band to L-Band Down Converter
1 Spectrum Analyzer

TEST SET-UP DIAGRAM: None

STEP PROCEDURE

1. Set the following RD-301 controls to the indicated settings:

CONTROL	SETTING
MODULATION Switches (19)	CW
RF/IF Switches (10)	MNL
OUTPUT LEVEL COARSE (5)	-50 dBm
PRF/RF (2)	RF
MNL FREQ (8)	9375 MHz
CONTOUR/R2 dB (3)	00

2. Connect "X-Band to L-Band Down Converter" to RF I/O Connector (11) with serialized coax cable.

3. Connect output of Down Converter to Spectrum Analyzer.

4. Measure power level with Spectrum Analyzer.

5. Change MODULATION Switch (19) to EXT (+) and measure power level with Spectrum Analyzer.

NOTE:

Difference between "ON" level of Step 4 and "OFF" level of Step 5 should be $\geq$70 dB.

CALIBRATION PROCEDURE: PANEL PEAK POWER SCALE CALIBRATION

PREREQUISITE: Paragraph 3-2-2

SPECIAL ACCESSORY EQUIPMENT REQ'D: 1 X-Band XMTR

TEST SET-UP DIAGRAM:

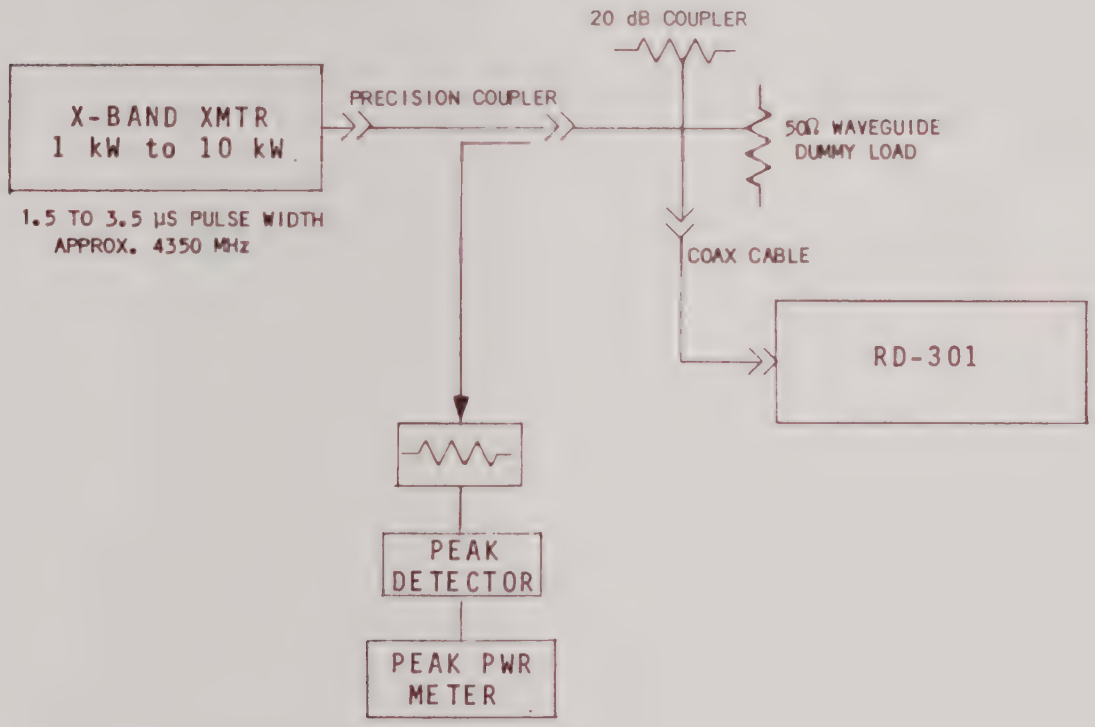

NOTE:

20 dB coupler, waveguide dummy load and coax cable must be serialized and calibrated with the specific RD-301 test set (component of each set).

Figure 3-11 Panel Peak Power Scale Calibration Test Set-Up

STEP	PROCEDURE
1.	Connect X-Band XMTR to RD-301 as shown in Figure 3-11.
2.	Set the following RD-301 Controls to the indicated settings:

CONTROL	SETTING
PRF/RF Switches (2)	RF
MTR FCTN (36)	PWR

3.	Apply 2 kW from Radar (X-Band XMTR) to RD-301. Adjust R-15 on Detector Buffer Board (see Section 5) for PANEL Meter (34) reading of 2 kW.
4.	Apply 10 kW from Radar (X-Band XMTR) to RD-301. Adjust R-5 on Detector Buffer Board for PANEL Meter (34) reading of 10 kW.
5.	Repeat Steps 3 and 4 as required.

CALIBRATION PROCEDURE: EXTERNAL TRIGGERING TEST

PREREQUISITE: Paragraph 3-2-2

SPECIAL ACCESSORY EQUIPMENT REQ'D:
1 Oscilloscope
1 Signal Generator

TEST SET-UP DIAGRAM: None

STEP PROCEDURE

1. Set the following RD-301 controls to the indicated settings:

CONTROL	SETTING
µS/NM (28)	µS
RNG SEL (31)	1 Ring
CONTOUR/R2 dB (3)	00
MODULATION Switches (19)	EXT (+)

2. Connect Oscilloscope Channel A to DLYD SYNC Connector (17).

3. Connect Signal Generator to EXT TRIG Connector (16) and to Oscilloscope Channel B.

4. Trigger Oscilloscope from positive edge of Signal Generator input.

5. Set Signal Generator controls for .10 µS positive pulse output, 50 Hz to 20 kHz.

6. Adjust output level of Signal Generator until delayed sync pulse appears. Vary Signal Generator frequency from 50 Hz to 20 kHz.

NOTE:

The highest output level required to trigger delayed sync pulse is less than 2 V.

7. Change MODULATION Switch (19) to EXT (-).

8. Set GEN for 10 µS negative pulse to trigger Scope from negative edge of Signal Generator input.

9. Adjust output level of Signal Generator until delayed sync pulse appears.

STEP	PROCEDURE
10.	Vary Signal Generator frequency from 50 Hz to 20 kHz.

NOTE:

The highest output level required to trigger delayed sync pulse is less than -2 V.

CALIBRATION PROCEDURE: 1 kHz AM

PREREQUISITE: Paragraph 3-2-2

SPECIAL ACCESSORY EQUIPMENT REQ'D:
1 X-Band to L-Band Down Converter
1 Modulation Meter

TEST SET-UP DIAGRAM: None

STEP	PROCEDURE

1. Set the following RD-301 controls to the indicated settings:

CONTROL	SETTING
MODULATION Switches (19)	CW
RF/IF Switches (10)	MNL
OUTPUT LEVEL COARSE (5)	-50 dBm
MNL FREQ (8)	9375 MHz

2. Connect X-Band to L-Band Down Converter and RF I/O Connector (11) with serialized coax cable.
3. Connect L-Band output from Down Converter to Modulation Meter.
4. Switch 1 kHz AM Switch (15) to "ON" position.
5. Adjust R-3 on AGC Board for 30% AM level on Modulation Meter.

RD-301 FRONT PANEL

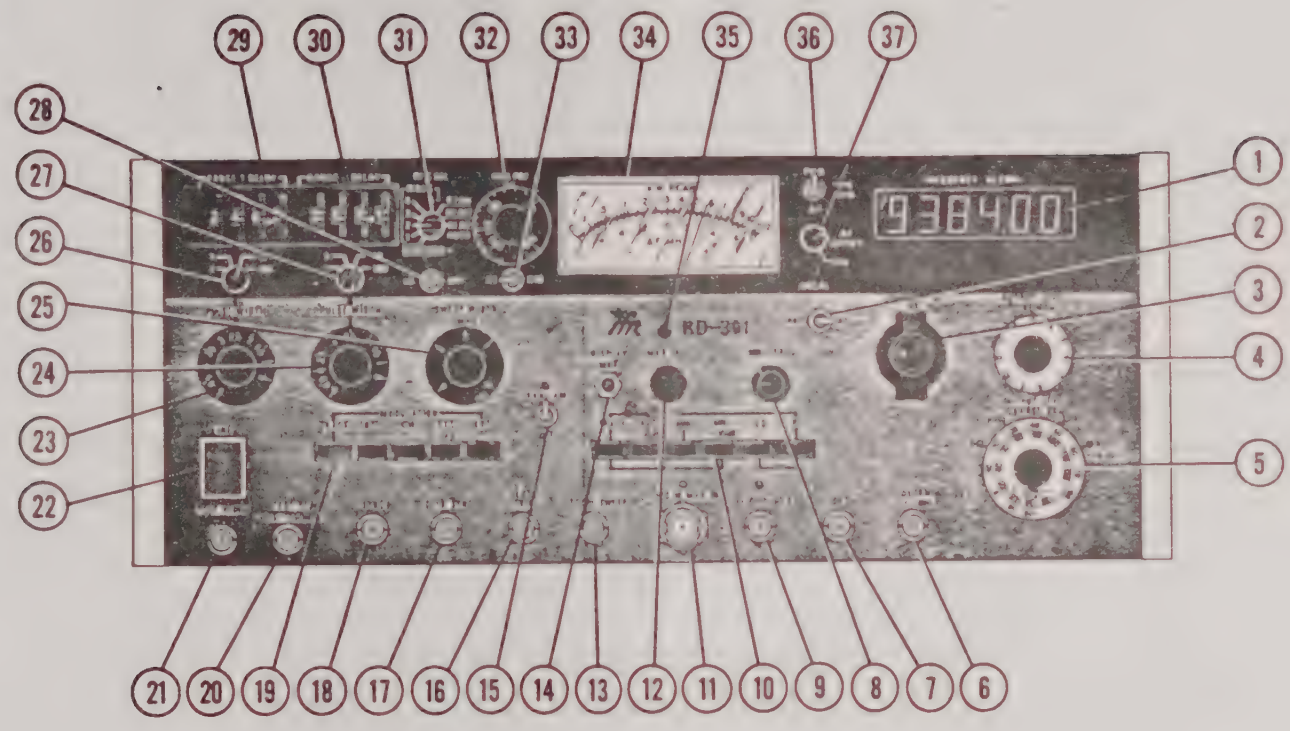

Figure 3-12 RD-301 Front Panel

1. FREQUENCY Hz/MHz Digital Display
2. PRF/RF Switch
3. CONTOUR/R2 dB Control
4. OUTPUT LEVEL FINE dBm Control
5. OUTPUT LEVEL COARSE dBm Control *
6. DSCRM .1 V/MHz Connector
7. DET Connector
8. MNL FREQ Controls
9. IF OUT 50Ω Connector *
10. RF/IF MODE Pushbutton Switches *
11. RF INPUT/OUTPUT Connector (120 W MAX IN) *
12. MKR FREQ Controls
13. SCOPE SWEEP Connector
14. DISPLAY MKR Switch
15. 1 kHz AM Switch *
16. EXT TRIG Connector
17. DLYD SYNC Connector
18. SYNC Connector
19. MODULATION MODE Pushbutton Switches
20. TEST RF 1045-1250 MHz Connector
21. TEST VIDEO Connector
22. LINE Switch
23. PULSE WIDTH Control (RANGE 1)
24. PULSE WIDTH Control (RANGE 2)
25. SWEEP WIDTH MHz Control
26. PULSE WIDTH MULTIPLIER Control (RANGE 1)
27. PULSE WIDTH MULTIPLIER Control (RANGE 2)
28. µS/NM Switch
29. RANGE 1 DELAY Thumbwheel Switches
30. RANGE 2 DELAY Thumbwheel Switches
31. RNG SEL Switch *
32. INTL PRF Control
33. X1/X10 INTL PRF Switch
34. PANEL Meter
35. PANEL METER ZERO Control
36. MTR FCTN Switch
37. ΔF OFFSET Control *

* Light Emitting Diode (LED) Indicators, associated with control or switch, indicate that particular function is active. LED indicator is explained further under description of control or switch, where necessary.

3-3 TEST EQUIPMENT LIST

Adaptor, Type N to Type SMA

Amplifier, TWT, Hewlett-Packard Model 495A, or equivalent

Attenuator, 20 dB Coaxial, Texscan FP-50-20 dB, or equivalent

Calibrating RF Pulse Generator (See Figure 4-10)

Coaxial Cable, Flexible

Coaxial Tee

Detector, Crystal, Hewlett-Packard Model 423A, or equivalent

50 Ohm Load, Hewlett-Packard Model 10100C, or equivalent

Filter, High Pass, (if required), Addington Laboratories Model 103300239, or equivalent

Frequency Counter (VHF), Fluke Model 7220, or equivalent

Heterodyne (Micro Mixer, Watkins Johnson Model WJM 1-H)

Insulated Screwdriver or Metal Tipped Tuning Tool

Insulated Tuning Tool

Oscilloscope, Tektronix Model 465, 100 MHz, or equivalent

Power Meter, Boonton 4210 Microwatt meter with 4210-4B Power Sensor, or equivalent

Power Supply, 0-5 V dc

Pulse Generator, Wavetek Model 145, or equivalent

Signal Generator, L-Band Laboratory, Hewlett-Packard Model 8640B Frequency Double Option 002, or equivalent

Signal Generator, X-Band, Hewlett-Packard Model 8620/86290A, or equivalent

Tracking Generator, Tektronix TR502 or equivalent

Voltmeter, Digital (DVM), Fluke Model 830, or equivalent

VSWR Bridge

X-Band to L-Band Down Converter

SECTION 4 - MECHANICAL ASSEMBLY DRAWINGS

4-1 INTRODUCTION

This section contains Mechanical Assembly drawings of the various modules in the RD-301. These drawings are aids for:

1. Locating and identifying various connectors, components, adjustment pots, etc.

2. Disassembly of individual modules.

4-2 ALPHABETICAL INDEX OF MECHANICAL ASSEMBLIES

TITLE	DRAWING NO.	PAGE
Card Frame	7005-4940-600 (2 Sheets)	4-10, 4-11
Counter, Display	7005-4940-400	4-9
Composite, RD-301	7003-4940-000 (3 Sheets)	4-2 thru 4-4
Delay Line	7005-4940-800	4-12
Floor Assy	7005-4941-300	4-13
Front Panel	7005-4940-100 (2 Sheets)	4-7, 4-8
Main Diode	7005-4940-900	4-16
Rear Panel	7005-4940-200 (2 Sheets)	4-5, 4-6
VCO #2	7005-4942-400 (2 Sheets)	4-14, 4-15

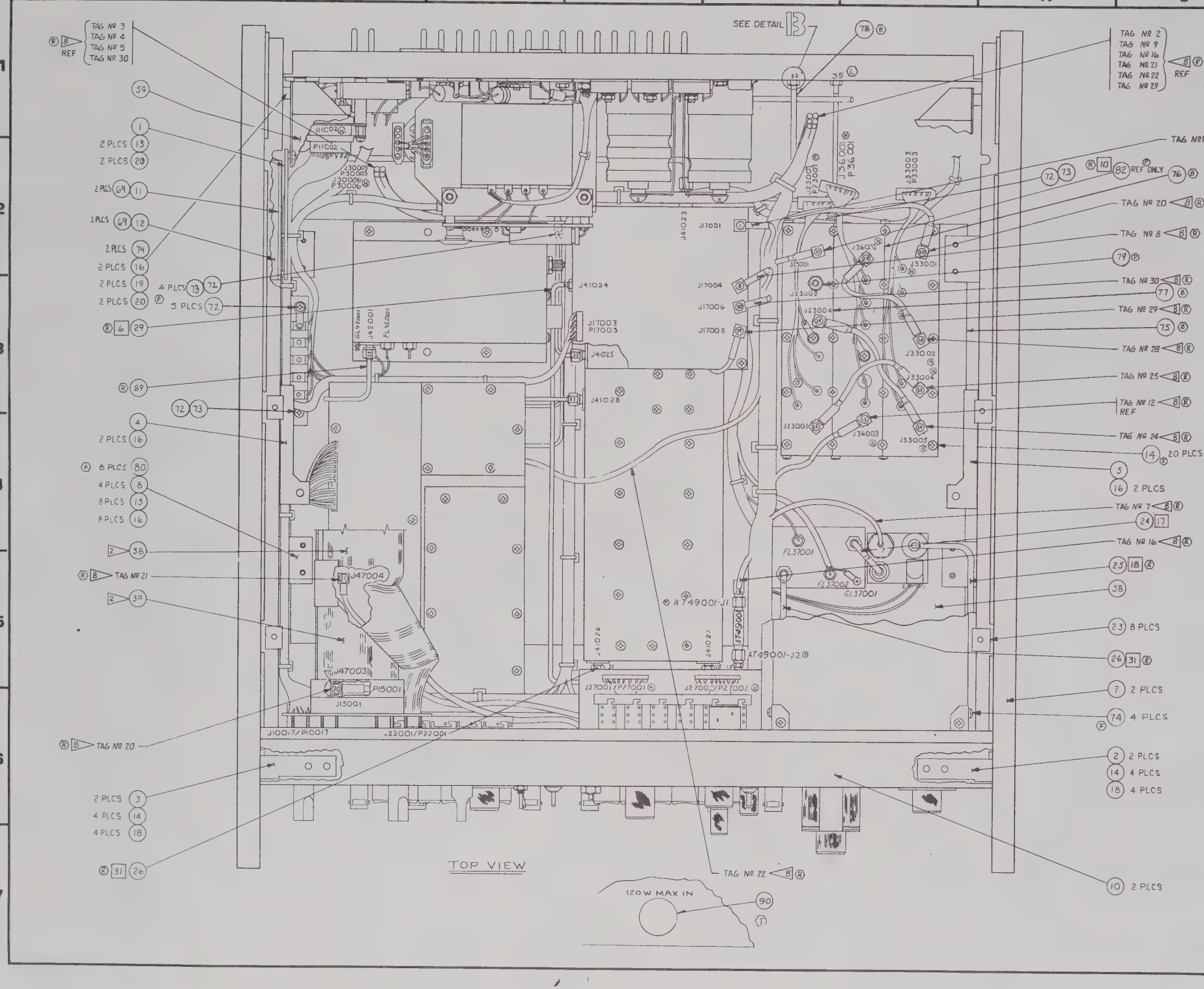

DATE	REV	CHANGE	APVD
4/30/85	A	PROD. RELEASE PER ECN 6490	TL
6/24/85	B	INC RC 7076 + ECN 7013 MTH	VLH
7/26/85	C	INC RC 7136 MTH	DS
8/28/85	D	INC RC 7221 AO	DS
8/15/85	E	INC RC 7535 MKM	VLH
9/16/85	F	INC RC 7652 BA	VLH
10/11/85	G	INC RC 7797 JS	DAH
11-1-86	H	INC RC 7861 AO	VLH
11-6-85	J	INC RC 7767	
	K	INC RC 7906 OJ	VLH
12-30-85	L	INC ECN 8052 JS	SL
12-30-85	M	INC ECN 8053 JS	SL
1/14/86	N	INC RC 8097 DAH	JS
2-11-86	P	INC ECN 8052 (REVISIONS) RB	TL
6-3-86	R	INC ECN 8641 RB	VLH
12-18-86	T	INC ECN 9313 AO	VLH
12-30-86	U	INC ECN 9233 JM	VLH
3-5-87	V	INC RC 9560 RB	VLH
3-11-87	W	INC ECN 9572 RB	VLH

NOTES:

1. ALL REF. Nº'S CARRY AN ASSIGNED DESIGNATOR SERIES. THIS DWG. CARRIES SERIES 49XXX (e.g., AT1 IS AT49001).
2. SHOWN UNFOLDED FOR CLARITY, (38) & (39) ARE TO BE FOLDED & RAN BETWEEN (7) & (61); (38) FROM RANGE DISCRETE SW BD TO RANGE BD #2, (39) FROM RANGE DIGIT SW BD TO RANGE BD #1.
3. MOUNT (67) TO (7) WITH 3/4" WIDE 2 SIDED TAPE, 1050-0000-170.
4. LAST REF Nº USED: 49001 (N)
5. NOT USED:
6. LAST ITEM No. USED: 90
7. ITEM Nº'S NOT USED: 21, 22, 71, 34, 33 30, 31, 57, 36, 44A, 47, 46A, 46B, 45, 48, 43, 44B 54, 49, 50, 42, 60, 53, 52, 51, 40, 41, 27
8. FLAGGED COMPONENTS ARE PART OF FLEX COAX KIT DPN 7009-4940-000.
9. PART OF VCO MECH ASSY 7005-4942-400
10. ☐ INDICATES TAG Nº OF COAX.

(E) SEE SHT 3 FOR COAX RUNNING LIST
SEE SHEET 2 FOR DETAILS
SEE SEPARATE BOM

DASH NO	REF DES SERIES	NEXT ASSY	MODEL
-000	49000	9001-4902-000	RD-301

APPLICATION

C Bom

-IFR INC- 10200 West York Street Wichita Kansas 67215

DRAWN MKM DATE 4-10-85
CHECKED [signature] DATE 4-23-85
APPROVED [signature] DATE 4-23-85

TITLE COMPOSITE ASSEMBLY RD-301 (49-400)

SIZE D DWG. NO. 7003-4940-000 REV W

SCALE — CODE IDENT 91180 WEIGHT — SHEET 1 OF 3

DATE	REV	CHANGE	APVD
		SEE SHT 1 FOR REV	

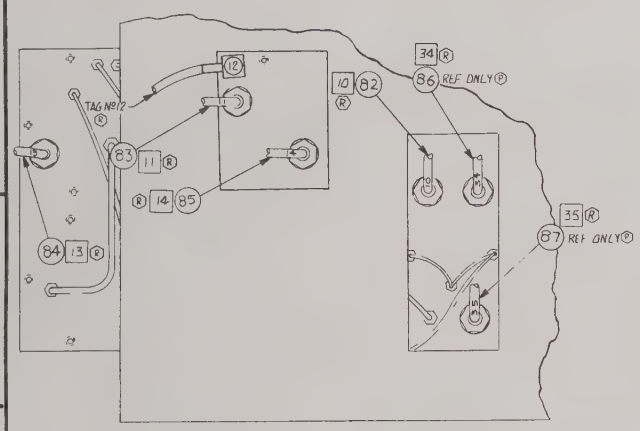

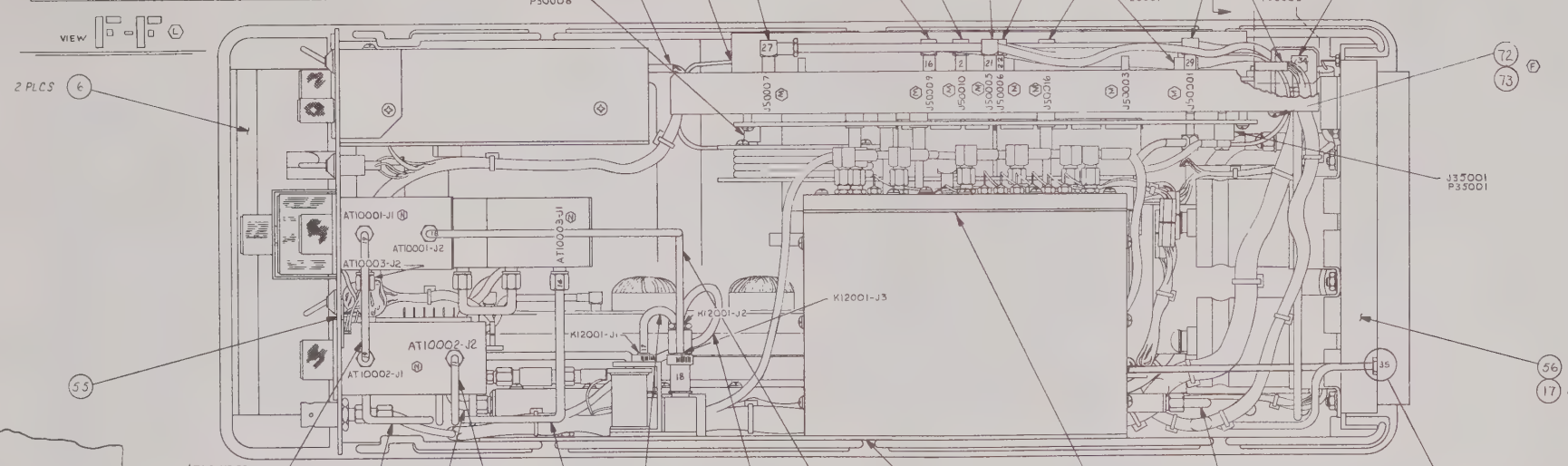

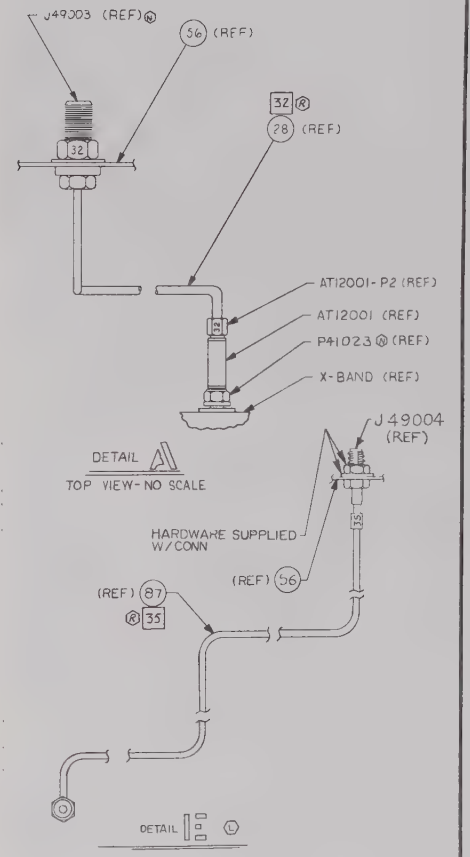

(E) SEE SHT 3 FOR COAX RUNNING LIST

SEE SHEET 1 FOR NOTES

DASH NO	REF DES SERIES	NEXT ASSY	MODEL
-000	49000	9001-4902-000	RD-301

APPLICATION: HAS BOM

UNLESS OTHERWISE SPECIFIED ALL DIMENSIONS APPLY AFTER FINISH. TOLERANCES: DECIMALS .xx ±.1, .xxx ±.5; FRACTIONS ±; ANGLES ±; SURFACE FINISH; REMOVE ALL BURRS. DO NOT SCALE THIS DRAWING. MATERIAL. FINISH.

-IFR INC- 10800 West York Street Wichita, Kansas 67215

DRAWN MKM	DATE 4-11-85	TITLE COMPOSITE ASSEMBLY
CHECKED [illegible]	DATE 4-23-85	RD-301 (49-400)
APPROVED Greenbank	DATE 4-23-85	SIZE D, DWG NO 7003-4940-000, REV W
		SCALE, CODE IDENT 91150, WEIGHT, SHEET 2 OF 3

DATE	REV.	CHANGE	APVD
		SEE SHT 1 FOR REV	

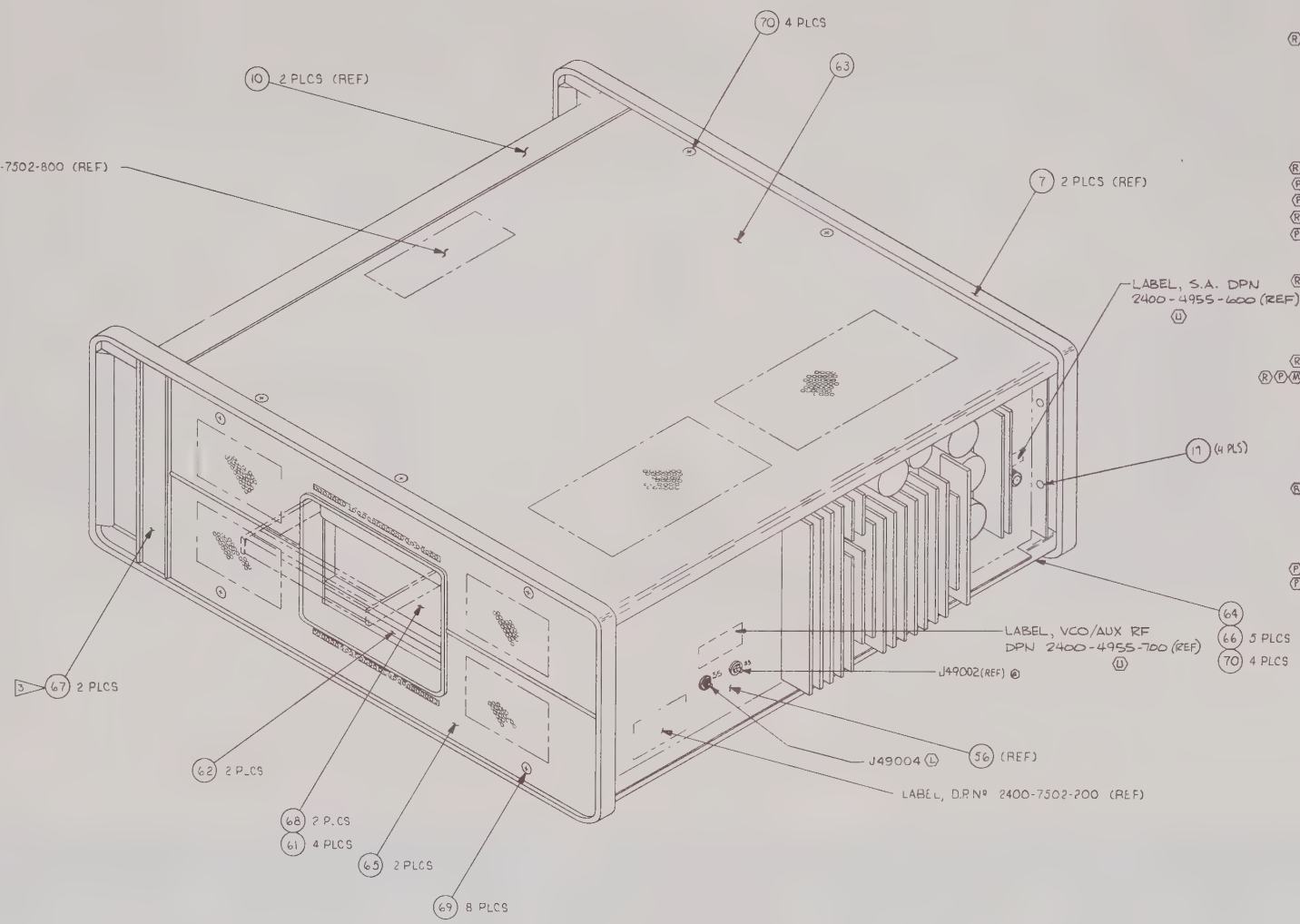

TRIM INSTALLATION

Ⓔ COAX RUNNING LIST

	ITEM Nº	TAG Nº	FROM TERMINAL	FROM REF Nº	TO TERMINAL	TO REF Nº	D.P. NUMBER	NOTES
RM		1	FRONT PANEL	J10007	DETECTOR	J17001	6050-0062-220	TEST VIDEO
R		2		J10008	DISCRIMINATOR #1	J50010	6050-0063-300	TEST RF
R		3		J10009	RANGE #2	J30005	6050-0062-650	SYNC
R		4		J10010	RANGE #2	J30008	6050-0062-650	DELAYED SYNC
R		5		J10011	RANGE #2	J30004	6050-0062-600	EXT TRIG
	29	6		J10016	X-BAND	J41024	6042-4980-900	12DB IN
R		7		J10013	RELAY/NO	XI2001-J2	6050-0091-050	IF OUT
R		8		J10014	DETECTOR	J17004	6050-0061-100	DET OUT
RM		9	FRONT PANEL	J10015	DISCRIMINATOR #1	J50016	6050-0062-220	.01V/MHz
PL	B2	10	VCO	J49004	PRESCALER	J23001	6042-4985-700	REF ONLY
PL	B3	11		J48008	MAIN ATTEN	AT10002-J2	6042-4986-000	REF ONLY
RP		12		J48007	IF GEN	J36003	6050-0931-650	REF ONLY
PL	B4	13		J48010	R2 ATTEN	AT10003-J2	6042-4985-800	REF ONLY
L	B5	14	VCO	J48011	R2 ATTEN	AT10003-J1	6042-4985-900	
	35	15	X-BAND	J41027	AT49001-P1		6042-4983-800	
RM		16	AT49001-J1		DISCRIMINATOR #1	J50009	6050-0562-100	
	24	17	MAIN DIODE SW		RELAY/NC	XI2001-J1	6042-4980-300	
	25	18	RELAY/COMM	XI2001-J3	AT10001-J2		6042-4980-400	
	32	19	AT10002-J1		AT10001-J1		6042-4982-200	
R		20	AUXILIARY BD	J28003	IF OSC	J33001	6050-0362-750	
RM		21	AUXILIARY BD	J28004	DISCRIMINATOR #1	J50005	6050-0043-100	
RPML		22	VCO	FL49002 SMC201-2000	DISCRIMINATOR #1	J25006	6050-1022-B20	REF ONLY
Y	B9	23	X-BAND	J41028	8.25 GHz	J42001	6042-4986-400	REF ONLY
R		24	PRESCALER	J23002	IF OSC	J33005	6050-0930-375	
R		25	IFOSC	J33004	PRESCALER	J23003	6050-0930-300	
L		26	NOT USED					
	37	27	DISCRIMINATOR #1	J25007		BULKHEAD CONN	6042-4984-000	
R		28	IF GEN	J36002	IF OSC	J33002	6050-0930-275	
RM		29	DETECTOR	J17005	DISCRIMINATOR #1	J50001	6050-0041-420	
R		30	DETECTOR	J17006	RANGE #2	J30007	6050-0042-020	
	26	31	X-BAND	J41026	MAIN DIODE SW	J37002	6042-4980-500	
	28	32	AT12001-P2		REAR PANEL	J11083	6042-4980-800	SPECTRUM ANALYSER
	78	33	X-BAND AUX OUT	J41023	REAR PANEL	J11084	6042-4985-300	
PL	B6	34	VCO	J48002	MTG BRACKET	BULKHEAD CONN	6042-4985-600	REF ONLY
PL	B7	35	VCO	J48001	REAR PANEL	BULKHEAD CONN	6042-4986-300	REF ONLY

SEE SHEET 1 FOR NOTES

DASH NO	REF DES SERIES	NEXT ASSY	MODEL
-000	49000	9001-4902-000	RD-301

APPLICATION

UNLESS OTHERWISE SPECIFIED ALL DIMENSIONS APPLY AFTER FINISH
TOLERANCES
DECIMALS .x ±.1 .xx ±.01
FRACTIONS ±
ANGLES °
SURFACE FINISH
REMOVE ALL BURRS
DO NOT SCALE FROM DRAWING

MATERIAL

FINISH

HAS BOM

-IFR INC- 10800 West York Street Wichita, Kansas 67215

DRAWN	MKM	DATE	4-12-85
CHECKED		DATE	4-23-85
APPROVED	Greenbank 4 23 85	DATE	

TITLE: COMPOSITE ASSEMBLY
RD-301 (49-400)

SIZE	DWG NO	REV
D	7003-4940-000	W

SCALE | CODE IDENT 81180 | WEIGHT | SHEET 3 OF 3

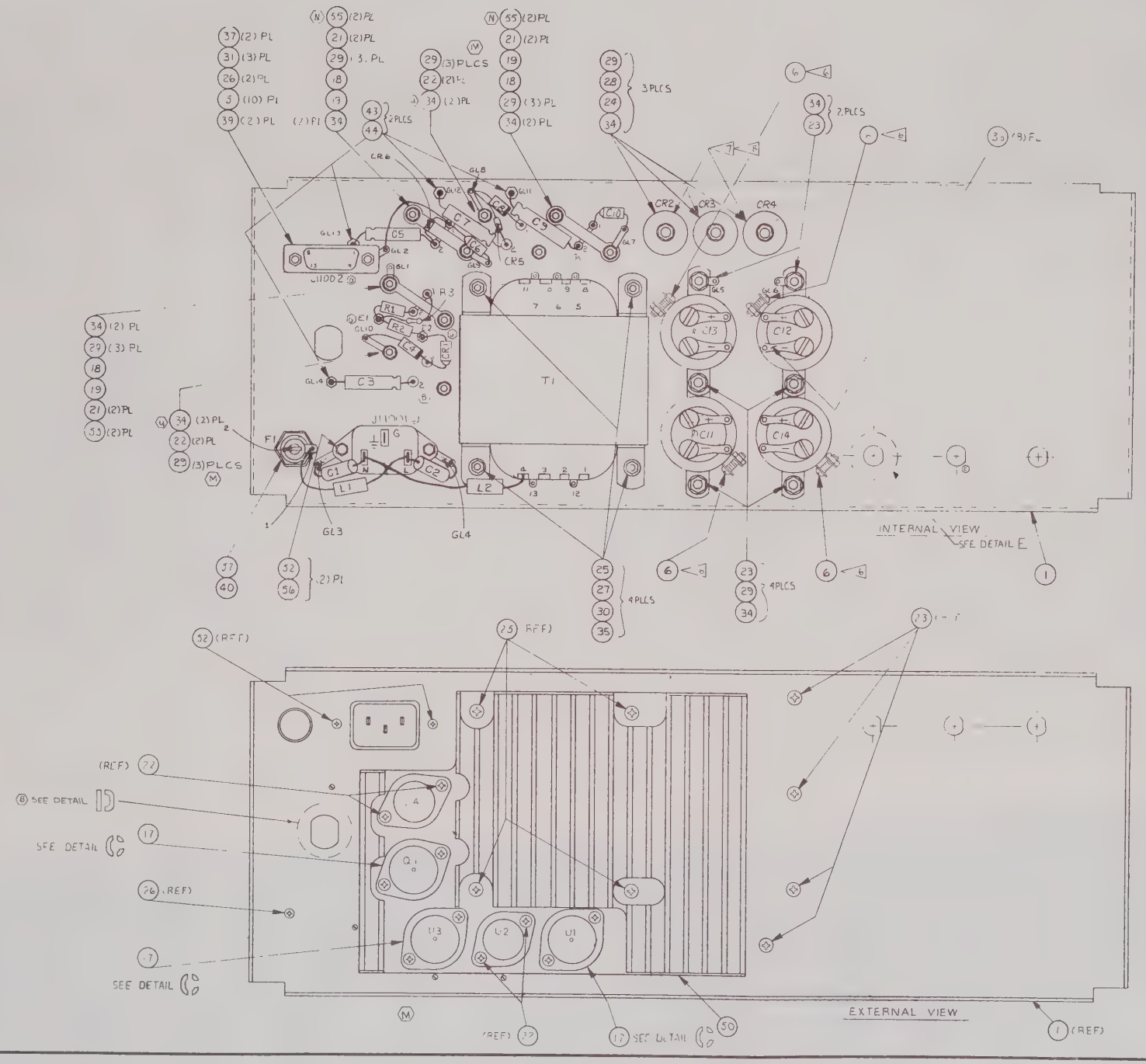

DATE	REV	CHANGE	APVD
	A	PROTOTYPE	
3/30/85	A	PROD. RELEASE ECN6490	
8/25	B	INC RC 6966 RW	SCR
4/11/85	C	INC ECN 7013 MTH	VLH
11/5/86	D	INC RC 6620	VLH
11/7/86	E	INC RC 7925 AO	VLH
	F	INC ECN 7321 PAH	VLH
1/13/86	G	INC RC 3097 LAH	JS
4/9/86	H	INC ECN 8474 WOW	VLH
9/29/86	J	INC ECN 9008 "CHIPS"	VLH
11/13/86	K	INC ECN 8851 "CHIPS"	VLH
11/25/86	L	INC ECN 9165 "CHIPS"	VLH
2/5/87	M	INC ECN 9372 AO	VLH
3/13/87	N	INC ECN 9598 RB	VLH
3/16/87	R	INC RC 9643 RB	VLH
8/31/87	T	INC ECN 9843 JS	VLH
1/29/88	U	INC ECN 10679 SLC	VLH

NOTES

1. SEE SHT 2 OF 2 FOR THE FOLLOWING:
   A) ASSEMBLY OF 170V POWER SUPPLY PC BD TO TRANSFORMER (T1)
   B) 110V/220V PLUG ASSY
2. SEE WIRE RUNNING LIST FOR COMPONENT CONNECTIONS
3. ALL REF. NOS CARRY AN ASSIGNED DESIGNATOR SERIES. THIS DRAWING CARRIES SERIES, 11XXX (e.g. R1 IS R11001)
4. LAST REF NO. USED:

C14	L2	R3
CR6	E2	U4
GL14	Q1	P3
J3B (B)	T1	

5. REF NO. NOT USED

P1	P2

6. HARDWARE FURNISHED WITH ANNOTATED PART.
7. CUT LEADS TO .25 MAX. LENGTH ON CR2, 3 & 4.
8. (M) THERMAL COMPOUND (1050-0000-019) BETWEEN ITEM (1) AND CR2, 3, AND 4.
9. USE 2-1½" WHITE TEFLON COATED WIRE #22 AWG (6002-0000-010)(110V) WITH ITEM (49). ATTACH BOTH ENDS TO MAKE CONNECTIONS BETWEEN CONNECTOR PINS.
10. USE 1½" WHT/RED TEFLON COATED WIRE #22 AWG (6002-0000-013) (220V) WITH ITEM (49). ATTACH BOTH ENDS TO MAKE CONNECTIONS BETWEEN CONNECTOR PINS.
11. PLACE JUMPERS (NOTE 9), BETWEEN PINS 1 & 3 AND PINS 2 & 4 OF J11003A TO CREATE 110V PLUG ASS'Y.
12. PLACE JUMPER (NOTE 10) BETWEEN PINS 2 & 3 OF J11003B TO CREATE 220 V PLUG ASS'Y.
13. MARK PLUG WITH PERMANENT INK AS 110V FOR -001, 220V FOR -002 PER DETAIL B. SECURE PLUGS TOGETHER WITH A TY-RAP (6004-6005-400).
14. PLACE CONNECTOR, J82, SO TERMINALS ENTER FROM BOTTOM (SEE ARROW ON SHT 2) & SO THAT PIN 1 IS AWAY FROM PANEL.
15. SEE WIRE RUNNING LIST FOR COMPONENT CONNECTIONS.
16. DRESS AND SECURE WIRING WITH TY-RAPS AS NEEDED, (6004-6005-400).
17. REPLACE EXISTING 8-32 SCREW WITH ITEM (54) AND ADD ITEM (30) WHEN MOUNTING BRKT, ITEM (51).
18. ITEM NO. NOT USED:
    2, 3, 4, 7, 8, 9, 10, 12, 13, 14, 15, 16
    20, 32, 33, 38, 42, 46, 41, 48

SEE SEPARATE BILL OF MATERIALS

DASH NO	REF DES SERIES	NEXT ASSY	MODEL
-200	11000	7003-4940-000	RD-301

APPLICATION

HAS BOM

-IFR INC-

DRAWN C. LYDAY 9-4-84

TITLE MECH ASS'Y REAR PANEL (49-402)

SIZE D DWG NO 7005-4940-200 REV

SHEET 1 OF 2

DATE	REV	CHANGE	APVD
		SEE SHT 1 FOR REV	

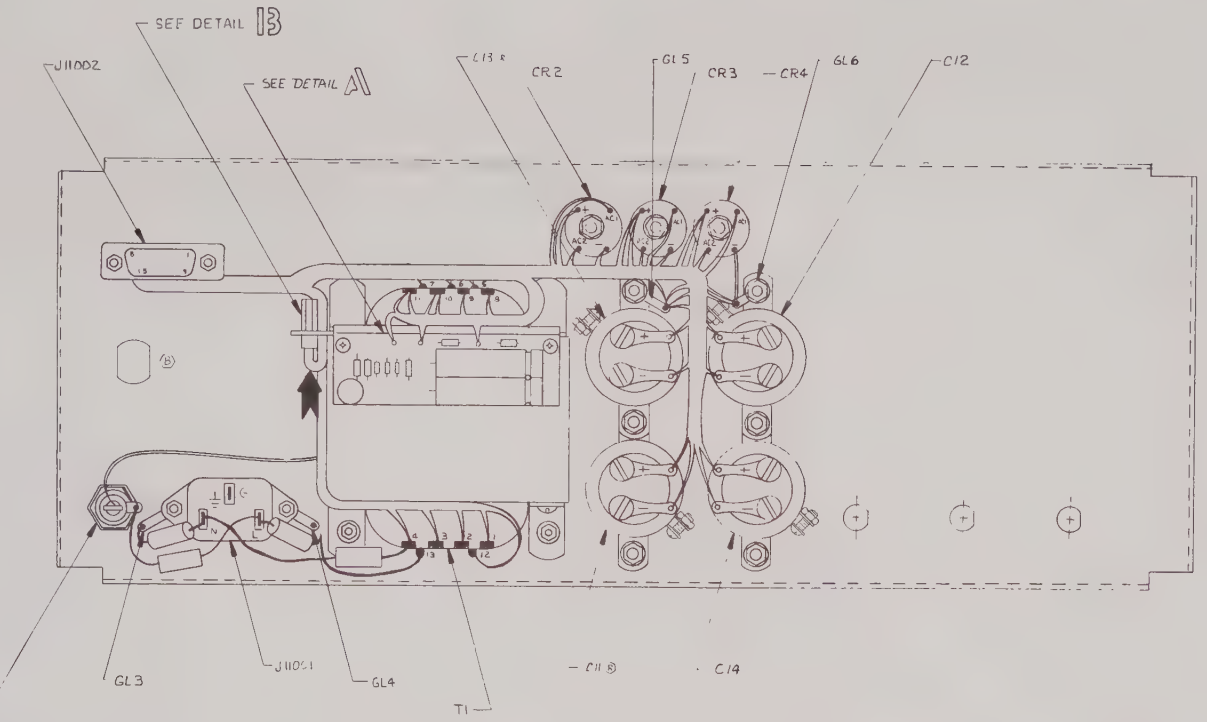

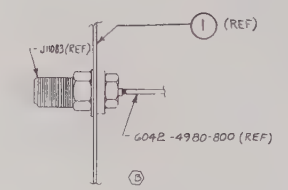

DETAIL 12

ASSEMBLY DONE @ COMPOSITE
SEE IFR DWG Nº 7003-4940-000

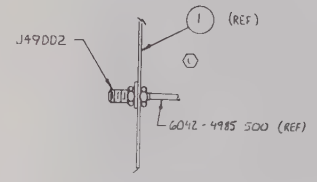

DETAIL 14

ASSY DONE @ COMPOSITE LEVEL
REF IFR DWG Nº 7003-4940-000

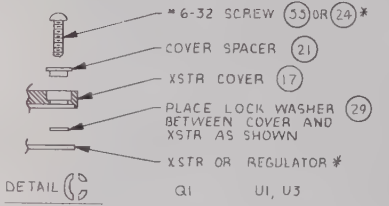

DETAIL 15
SCALE: NONE

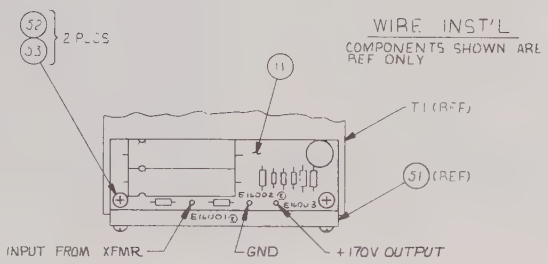

WIRE INST'L
COMPONENTS SHOWN ARE REF ONLY

DETAIL A (ROTATED 180°)
SCALE: NONE

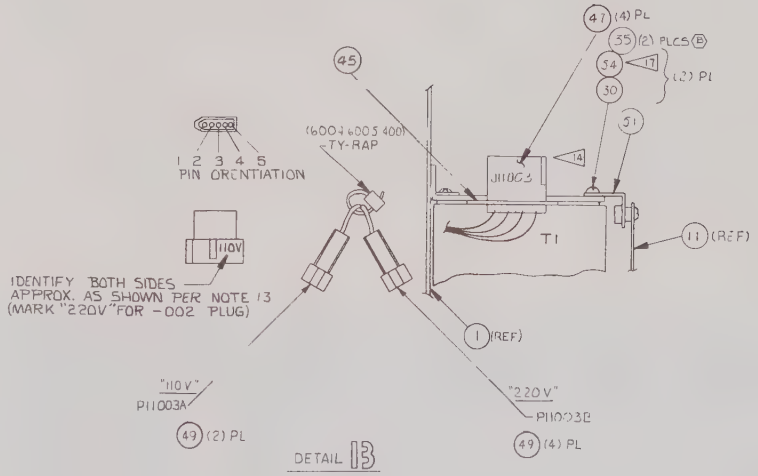

DETAIL 13
P11003A/220 P11003B PLUG ASSY
SCALE: NONE

SEE SHEET 1 FOR NOTES

DASH NO	REF DES SERIES	NEXT ASSY	MODEL
-200	11000	7003-4940-000	RD-301

APPLICATION

UNLESS OTHERWISE SPECIFIED ALL DIMENSIONS APPLY AFTER FINISH
TOLERANCES DECIMALS .XX ± .XXX ± FRACTIONS ± ANGLES ± SURFACE FINISH REMOVE ALL BURRS DO NOT SCALE THIS DRAWING

MATERIAL

FINISH

SEE BOM

- IFR INC - 10200 West York Street Wichita, Kansas 67215

DRAWN C. LYDAY	DATE 8-27-84	TITLE MECH ASSY REAR PANEL (49-402)
CHECKED	DATE	
APPROVED	DATE 9-6-84	SIZE D
		DWG NO 7005-4940-200
		REV U
		SCALE — CODE IDENT 51180 WEIGHT — SHEET 2 OF 2

DATE	REV	CHANGE	APVD
4/15/85	A	PROD. RELEASE. ECN 6490	TE
3/24/87	B	INC RL 7003 MTH	SLR
9/87	C	INC RC 7719 SLR	VLH
11/1/88	D	INC RC 8097 CAH	JS
1/89	E	INC ECN 9393 JS	VLH

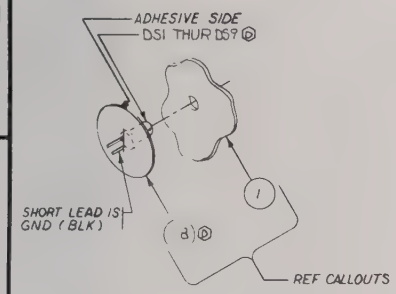

DETAIL A1
NO SCALE

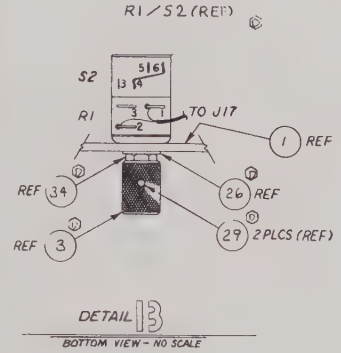

DETAIL B3
BOTTOM VIEW - NO SCALE

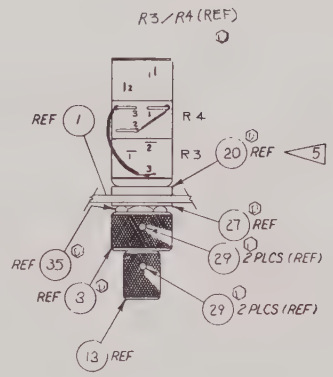

DETAIL C3
TOP VIEW - ROTATED 180° (NO SCALE)

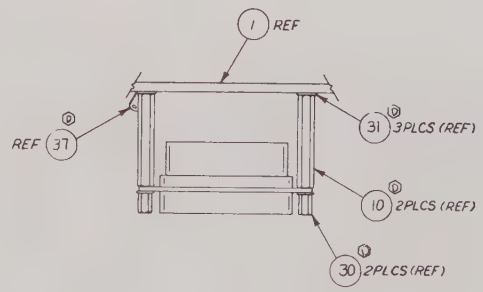

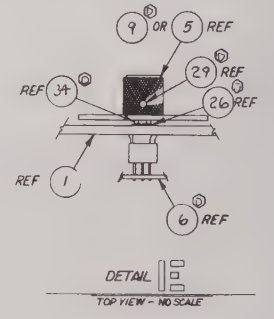

DETAIL B1
TOP VIEW - NO SCALE

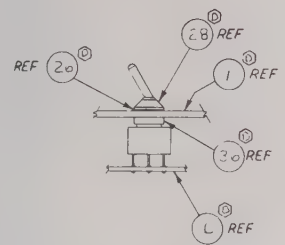

DETAIL C1
TOP VIEW - NO SCALE

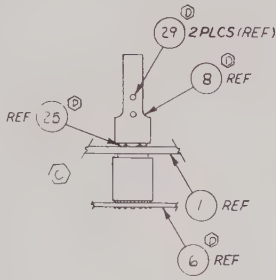

DETAIL C2
TOP VIEW - NO SCALE

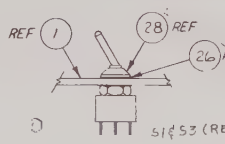

DETAIL H S1, S3
TOP VIEW - NO SCALE
(S3 ORIENTATION SHOWN)

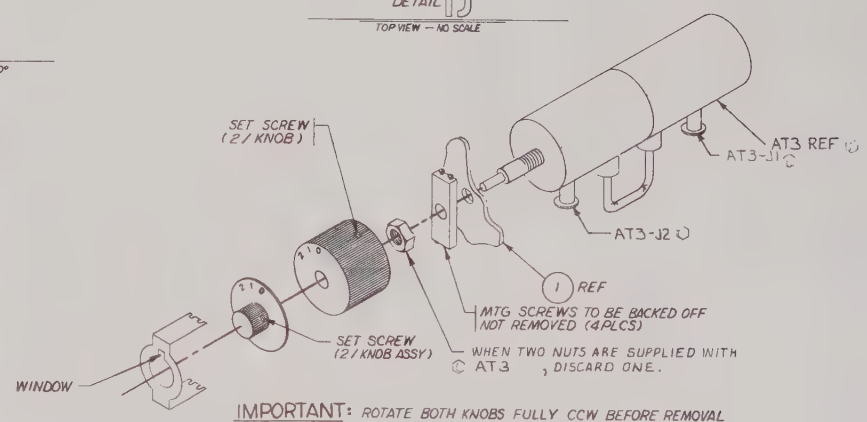

DETAIL D
TOP VIEW - NO SCALE

IMPORTANT: ROTATE BOTH KNOBS FULLY CCW BEFORE REMOVAL & PLACE Ø IN WINDOW UPON INSTALLATION. AFTER COMPLETION WINDOW SHOULD READ ØØ.

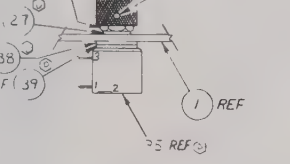

DETAIL K
TOP VIEW - NO SCALE

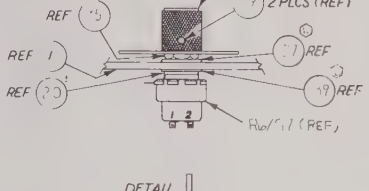

DETAIL L
TOP VIEW - NO SCALE

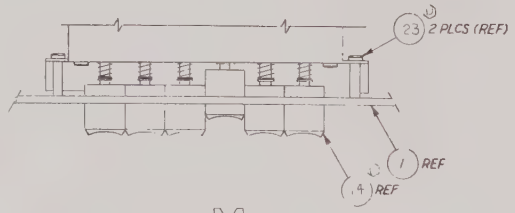

DETAIL M
BOTTOM VIEW - NO SCALE

DETAIL J
NO SCALE

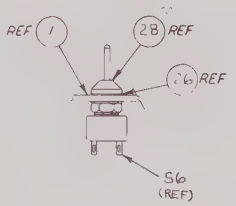

DETAIL N
TOP VIEW - NO SCALE

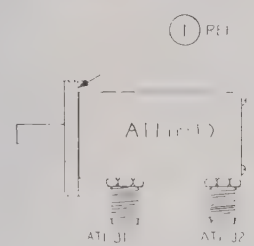

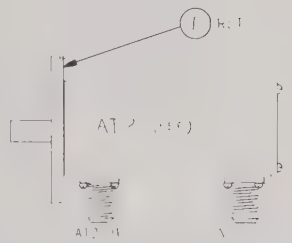

NOTE:
1. ALL REF Nº's CARRY AN ASSIGNED DESIGNATOR SERIES. THIS DWG CARRIES SERIES 10000 (eg. R1 is R10001).
2. LAST REF Nº USED: J19, C1, R7, AT4, S8, P4, M1, DS9, GL1
3. MTG HARDWARE SUPPLIED WITH PART.
4. REFERENCE DESIGNATORS NOT USED: S4
5. ITEM 46, SPACER, MAY REQUIRE SELECTIVE "FITTING".

-100	10000	7003-4940-000	RD301	
DASH NO	REF DES SERIES	NEXT ASSY	MODEL	
APPLICATION				

HAS B.O.M.

-IFR INC- 10800 West York Street Wichita Kansas 67215

DRAWN L A Meis, Jr. 16FEB85
CHECKED
APPROVED

TITLE: MECH ASSY FRONT PANEL RD-301 (49-401)

SIZE D | DWG NO 7005-4940-100 | REV E

SCALE NOTED | CODE IDENT 51180 | WEIGHT | SHEET 1 OF 2

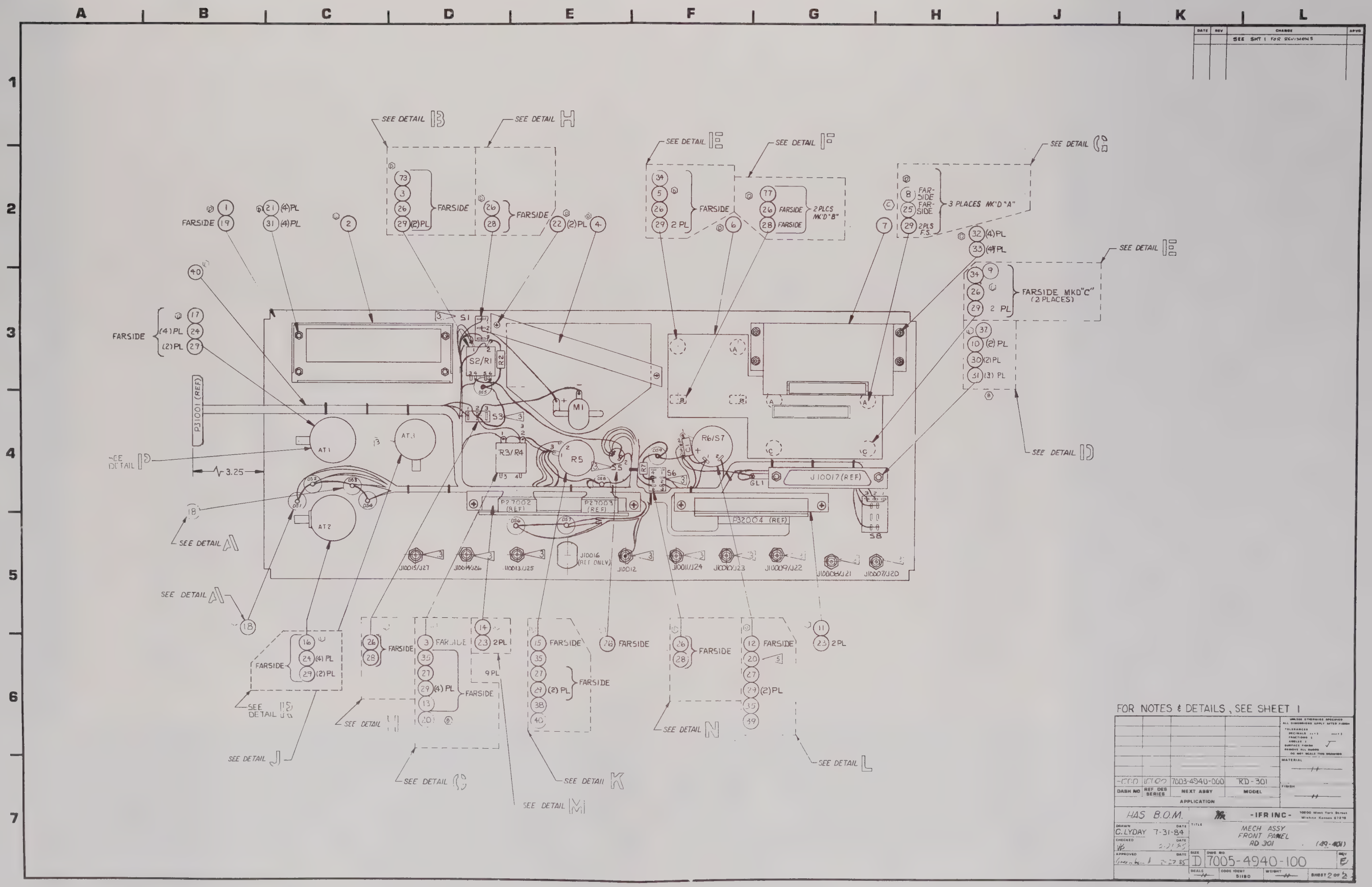
SEE SHT 1 FOR REVISIONS
SEE DETAIL B
SEE DETAIL H
SEE DETAIL E
SEE DETAIL F
SEE DETAIL C
SEE DETAIL I
SEE DETAIL D
SEE DETAIL A
SEE DETAIL J
SEE DETAIL G
SEE DETAIL K
SEE DETAIL M
SEE DETAIL N
SEE DETAIL L
FARSIDE
2 PLCS MK'D "B"
3 PLACES MK'D "A"
FARSIDE MKD "C" (2 PLACES)
P31001 (REF)
P27002 (REF)
P27003 (REF)
P32004 (REF)
J10017 (REF)
J10016 (REF ONLY)
J10015/J27
J10014/J26
J10013/J25
J10012
J10011/J24
J10010/J23
J10009/J22
J10008/J21
J10007/J20
AT1
AT2
AT3
S1
S2/R1
S3
S5
S6
S8
M1
R3/R4
R5
R6/S7
R2
R7
GL1
3.25
FOR NOTES & DETAILS, SEE SHEET 1
7003-4940-000
RD-301
DASH NO
REF DES SERIES
NEXT ASSY
MODEL
APPLICATION
HAS B.O.M.
-IFR INC-
C. LYDAY 7-31-84
MECH ASSY
FRONT PANEL
RD 301
(49-401)
D 7005-4940-100
E
SHEET 2 OF 2

DATE	REV	CHANGE	APVD
	A	PROTOTYPE RELEASE	
3/30/84	A	PROD. RELEASE ECN 6490	VH
1/9/85	B	INC RC 8170 SJA	

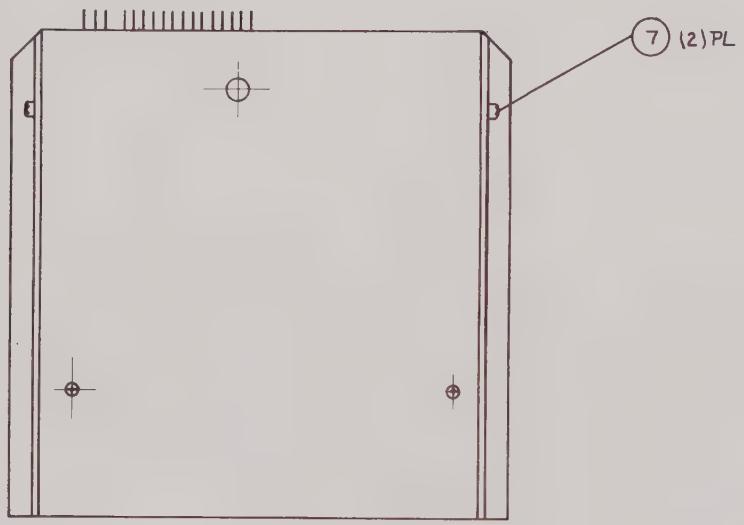

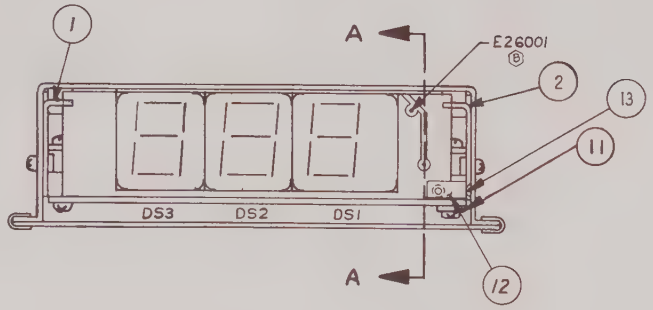

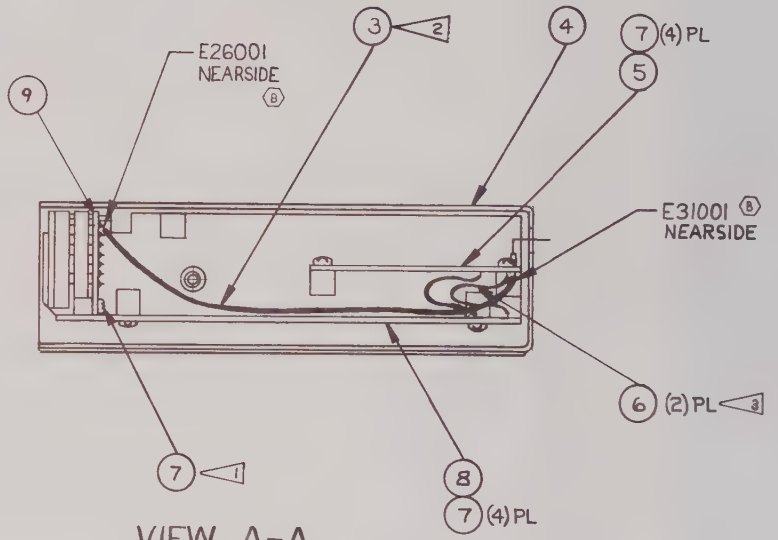

VIEW A-A
SCALE : NONE

NOTE:

1. INSTALL MTG BLK ITEM *12 ON PCBd ITEM *9. THEN FASTEN TO BRK'T ITEM *2. ALIGN PC LANDS AND SOLDER TO CONNECT ITEM 9 DISPLAY BD. TO ITEM 8 LOGIC BD
2. (B) WIRE, ITEM 3, SOLDERS FROM E31001 (BOTTOM SIDE OF ITEM 5 GATING BD) TO E26001 ITEM 9, DISPLAY BD.
3. (B) SOLDER FLEXSTRIPS ITEM *6 TO PC Bd's ITEM *5 (BOTTOM SIDE) & ITEM *8 TOPSIDE BEFORE FASTENING TO NUT BLK's. (E21003 TO E31003 & E21004 TO E31004)

UNLESS OTHERWISE SPECIFIED: ALL DIMENSIONS APPLY AFTER FINISH
TOLERANCES DECIMALS .xx ± .xxx ± FRACTIONS ± ANGLES ± SURFACE FINISH √ REMOVE ALL BURRS DO NOT SCALE THIS DRAWING

MATERIAL: SEE B.O.M.
FINISH: //

DASH NO	REF DES SERIES	NEXT ASSY	MODEL
(B) -400'	14000	7003-4940-000	RD-301

APPLICATION

IFR INC - 10200 West York Street Wichita, Kansas 67215

DRAWN	C. LYDAY	DATE	10-19-84
CHECKED	Reed Young	DATE	2-18-85
APPROVED	Greenbank	DATE	2-20-85

TITLE: MECH ASSY, DISPLAY COUNTER (49-404)

SIZE	DWG NO.	REV
C	7005 4940-400	B

SCALE 1:1 | CODE IDENT 51180 | WEIGHT // | SHEET 1 OF 1

DATE	REV	CHANGE	APVD
	A	FORMAL DRAWING	
22 NOV 1984	B	REV PER MKUP	
3/29/85	B	PROD RELEASE ECN 8010	
5-10-85	C	INC RC 6990 RW	
8/11/85	D	INC RC 7797 JS	
1-8-86	E	INC ECN 8053 JS	
1-8-86	F	INC ECN 8078 WAW	

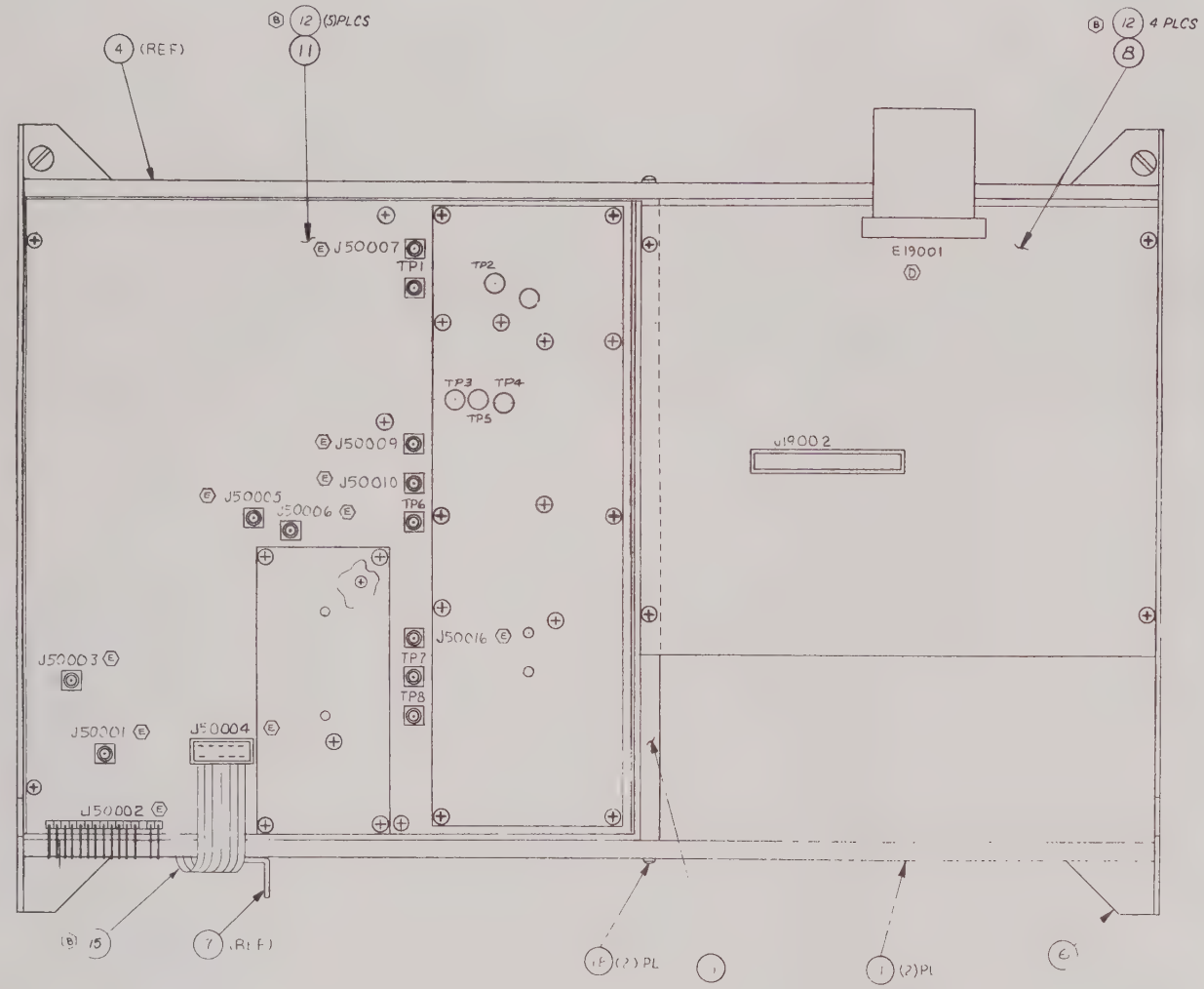

TOP VIEW

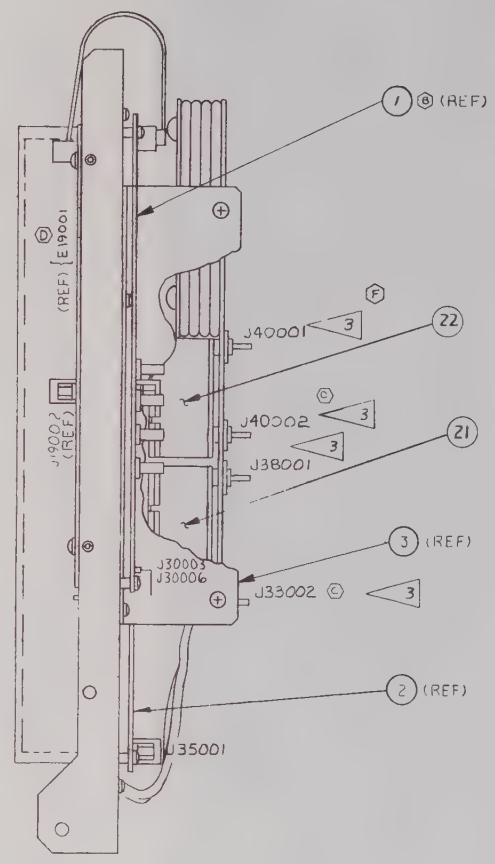

NOTES:

1. ALL REF NOS. CARRY AN ASSIGNED DESIGNATOR SERIES. THIS DWG CARRIES SERIES 13XXX (e.g., J1 IS J13001).
2. ITEM NOS NOT USED: 1C, 13, 14, 16, 17

(F) 3 HARDWARE FURNISHED WITH ASSYS

SEE SEPARATE BILL OF MATERIALS

DASH NO	REF DES SERIES	NEXT ASSY	MODEL
	00XXX	7003-4940-000	RD-301

APPLICATION: HAS BOM

-IFR INC- 10200 West York Street Wichita Kansas 67215

DRAWN C LYDAY 10-2-84
CHECKED C.A Mais Jr 29 MAR 85
APPROVED 3-29-85

TITLE: MECH ASSY CARD FRAME 49-406

SIZE D | DWG NO 7005-4940-600 | REV F

SCALE — | CODE IDENT 51180 | WEIGHT — | SHEET 1 OF 2

UNLESS OTHERWISE SPECIFIED ALL DIMENSIONS APPLY AFTER FINISH
TOLERANCES DECIMALS .xx ± .xxx FRACTIONS ± ANGLES ± SURFACE FINISH REMOVE ALL BURRS DO NOT SCALE THIS DRAWING
MATERIAL —
FINISH —

DATE	REV	CHANGE	APVD
	A	SEE SHEET 1	

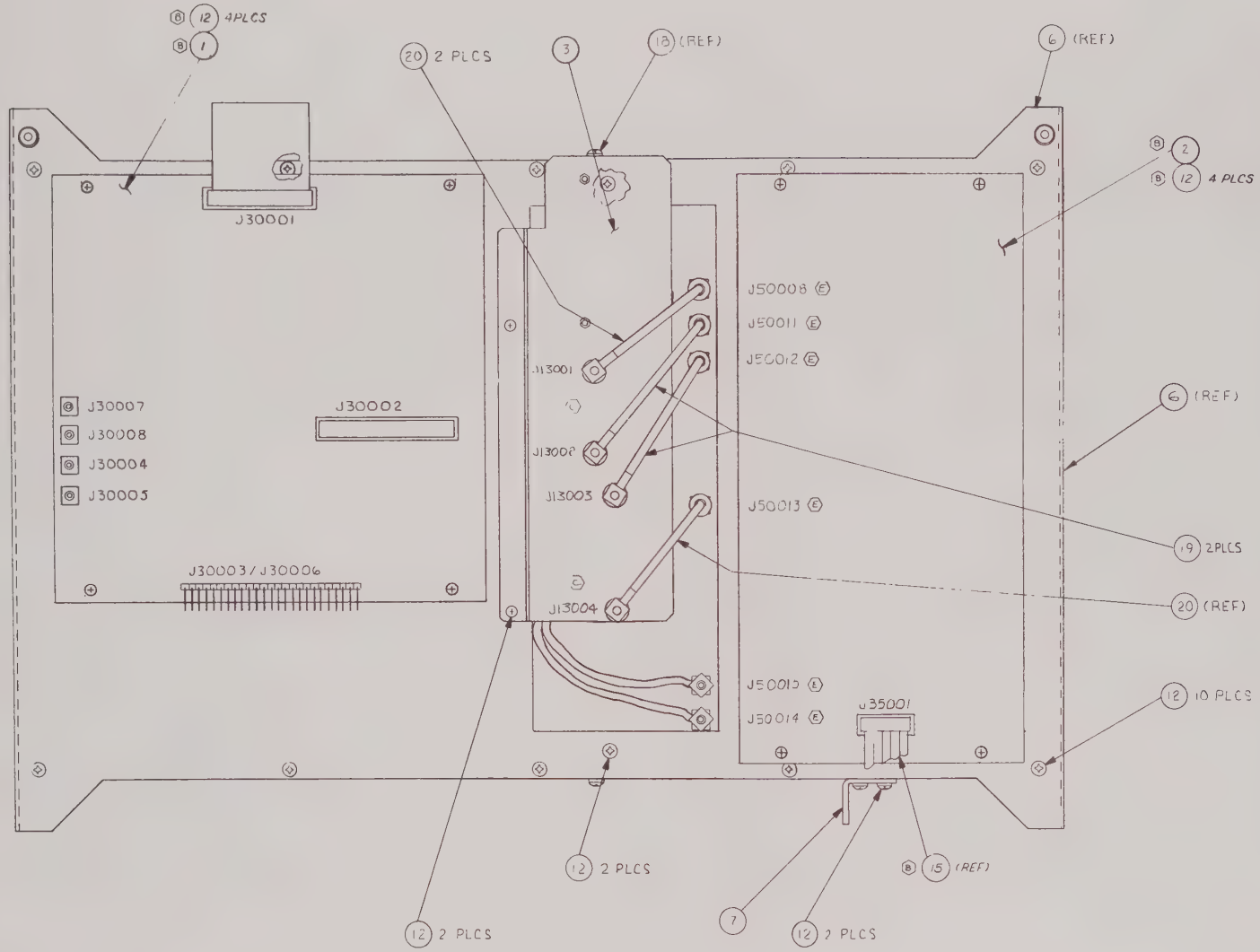

BOTTOM VIEW

SEE SHT 1 FOR NOTES

DASH NO	REF DES SERIES	NEXT ASSY	MODEL
	00XXX	7003-4940-000	RD-301

APPLICATION

UNLESS OTHERWISE SPECIFIED ALL DIMENSIONS APPLY AFTER FINISH
TOLERANCES
DECIMALS ±.XX ±.XXX
FRACTIONS ±
ANGLES ±
SURFACE FINISH √
REMOVE ALL BURRS
DO NOT SCALE THIS DRAWING

MATERIAL —//—

FINISH —//—

HAS BOM

-IFR INC- 10200 West York Street Wichita, Kansas 67215

DRAWN C. LYDAY DATE 10-9-84
CHECKED L. A. Mais, Jr DATE 29 MAR 85
APPROVED Greenbush DATE 3-29-85

TITLE MECH ASSY CARD FRAME 49-406

SIZE D DWG NO 7005-4940-600 REV F

SCALE —//— CODE IDENT 51190 WEIGHT —//— SHEET 2 OF 2

DATE	REV	CHANGE	APVD
3/29/85	A	PROD. RELEASE ECN 6490	TE
4/7/86	B	INC ECN 8078 WAW	VLH

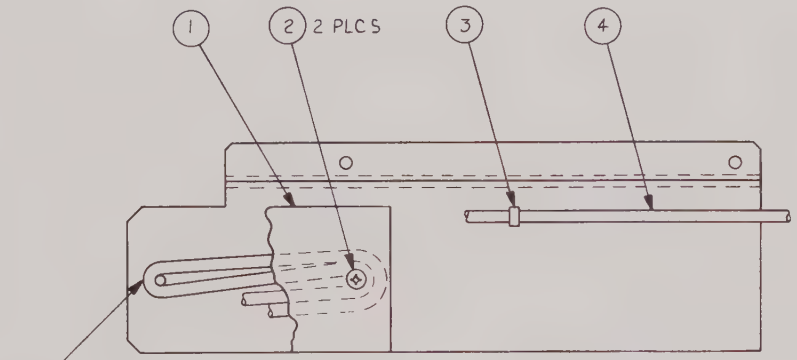

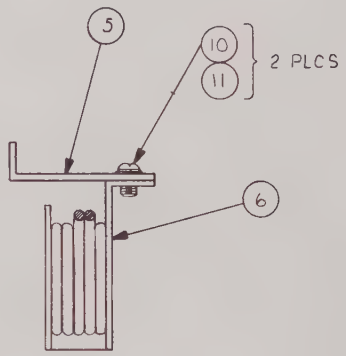

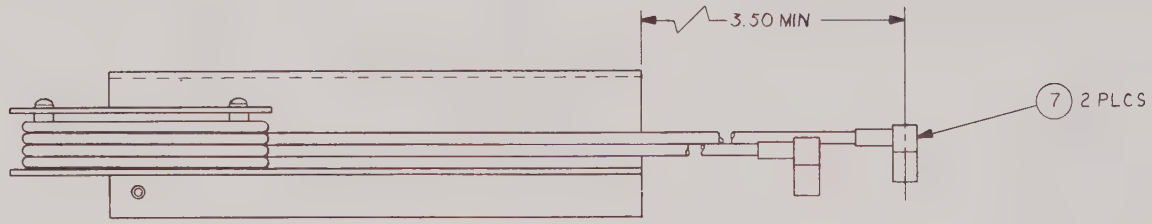

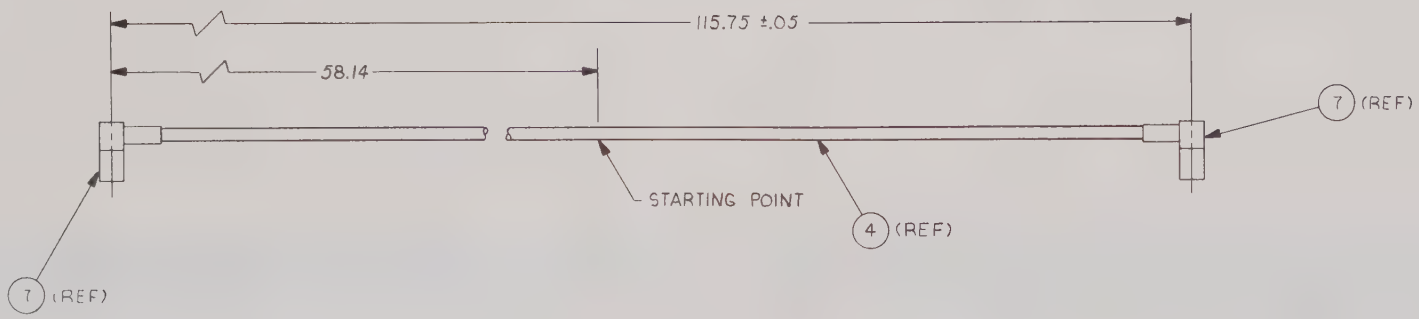

UNLESS OTHERWISE SPECIFIED ALL DIMENSIONS APPLY AFTER FINISH
TOLERANCES
DECIMALS .xx ±.05 .xxx ±
FRACTIONS ±
ANGLES °
SURFACE FINISH
REMOVE ALL BURRS
DO NOT SCALE THIS DRAWING

MATERIAL

FINISH

DASH NO	REF DES SERIES	NEXT ASSY	MODEL
	13XXX	7005-4940-600	RD-301

APPLICATION

-IFR INC- 10800 West York Street Wichita, Kansas 67215

DRAWN MKM	DATE 3-11-85	TITLE DELAY LINE ASSY	
CHECKED	DATE 3-21-85	RD-301 (49-408)	
APPROVED	DATE 3-31-85	SIZE C	DWG NO. 7005-4940-800 REV B
		SCALE 1:1	CODE IDENT 51180 WEIGHT SHEET 1 OF 1

DATE	REV	CHANGE	APVD
2/10/86	B	INC ECN 8052 ADDED COAX TO DWG.	
9-5-87	C	INC RC 9560	

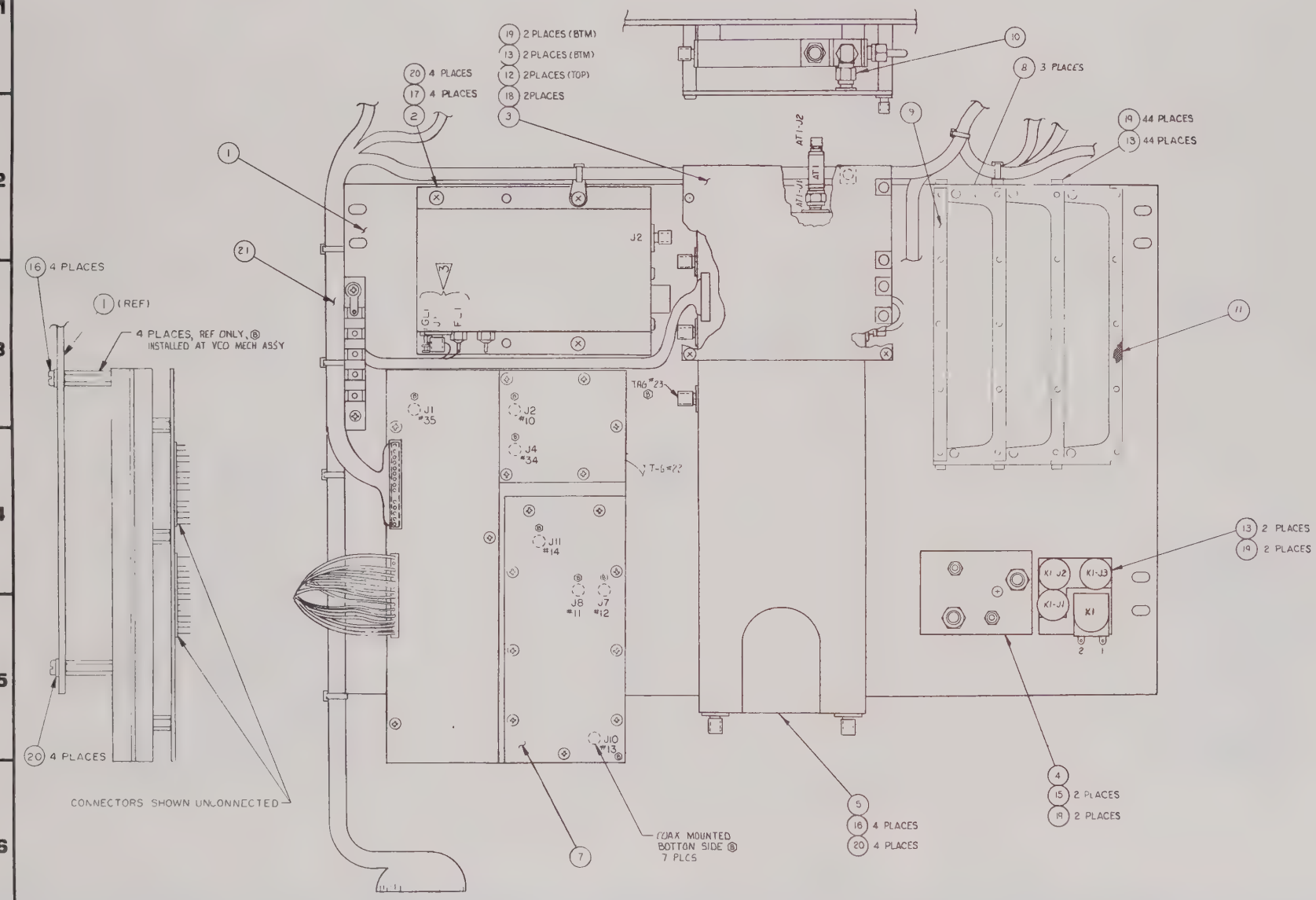

NOTE:

1. ALL REF Nº's CARRY AN ASSIGNED DESIGNATOR SERIES. THIS DWG CARRIES SERIES SIXXX (eg. GL1 is GL51001).
2. LAST REF Nº USED: GL1, FL1, J2, K1, AT1, AT1-J2, K1-J3
3. INCLUDED IN PURCHASE OF ASSOCIATED SUBASSY.
4. LAST ITEM Nº USED: 20
5. ITEM Nº'S NOT USED: 14
6. MOUNT THE FOLLOWING CABLES BEFORE INSTALLING THE VCO TO THE FLOOR ASS'Y
   TAG # 10-6042-4985-700
   11-6042-4986-000
   12-6050-0931-650
   13-6042-4985-800
   22-6050-1022-370
   34-6042-4985-600
   35-6042-4986-300
   14-6042-4985-900
   23-6042-4986-400
7. REF. COMPOSITE ASS'Y DRAWING FOR DETAILS ON COAX INSTALLATION (7003-4940-000)

DASH NO	REF DES SERIES	7003-4940-000 NEXT ASSY	RD301 MODEL
APPLICATION			

-IFR INC- 10200 West York Street Wichita, Kansas 67215

DRAWN SIGLER 12/16/85 | TITLE MECH ASSY-FLOOR 49-413

CHECKED [signature] 12-27-85

APPROVED [illegible] 12/24/85

SIZE D | DWG NO 7005-4941-300 | REV C

SCALE 1:1 | CODE IDENT 81150 | WEIGHT | SHEET 1 OF 1

DATE	LTR	CHANGE	APPD
	A		
	B	INC RC 8200	SAM
	C	INC ECN 8641	VLH
	D	INC ECN 9027 & 9027A DAH	VLH
11-1 86	E	INC RC 3268 AO	VLH
	F	INC ECN 10238 AO	VLH
2-19 88	G	INC ECN 10847 "CHILS"	VLH

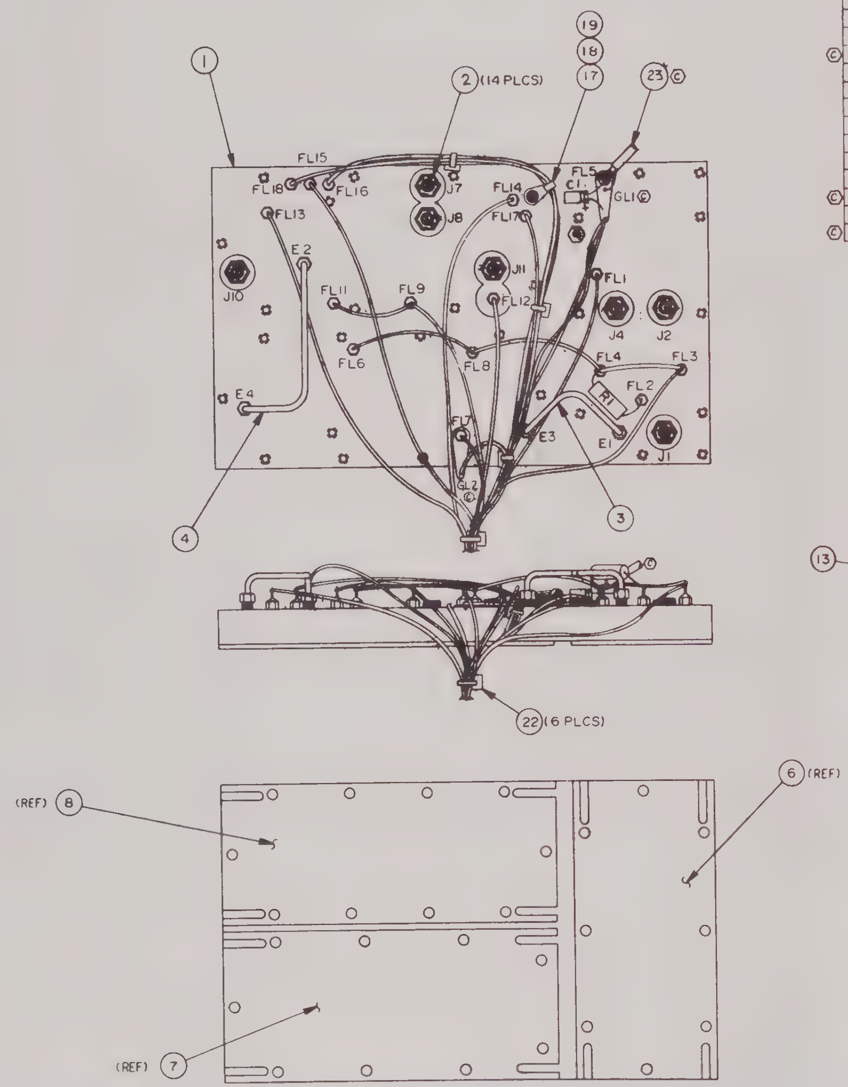

ASS'Y SHOWN WITH COVERS REMOVED FOR CLARITY

LINE NO.	FROM	TO	COLOR	AWG	LG
1	P47001-1	FL48018	BRN	26	11.5
2	-2	FL48017	BLU		7.0
3	-3	FL48016	ORN/WHT		11.0
4	-4	FL48007	YEL/WHT		4.5
Ⓒ 5	-5	GL48001	BLK		7.5
6	-6	FL48001	GRN		7.0
7	-7	FL48003	RED		6.5
8	-8	FL48012	VIO		6.0
9	-9	FL48009	GRA		5.7
10	-10	FL48014	WHT		7.5
11	-11	FL48015	WHT/BRN		7.5
12	-12	FL48013	WHT/RED		8.0
Ⓒ 13	-13		KEY		
14	-14	N/C			
Ⓒ 15	P47001-15	GL48002	BLK	26	4.5

WIRE RUNNING LIST (CONT)

LINE NO.	FROM	TO	COLOR	AWG	LG
16	FL48002	FL48004	R48001 220Ω ¼W		
17	FL48003	FL48004	RED	26	2.0
18	FL48004	FL48008	RED		2.8
19	FL48008	FL48006	RED		2.5
20	FL48009	FL48011	GRA	26	1.9
Ⓒ 21	FL48005	GL48001	C48001 4.7 uf		
Ⓒ 22	FL48005	J25006 ◁7	CTR COND		
Ⓒ 23	GL48001	J25006 ◁7	SHIELD		

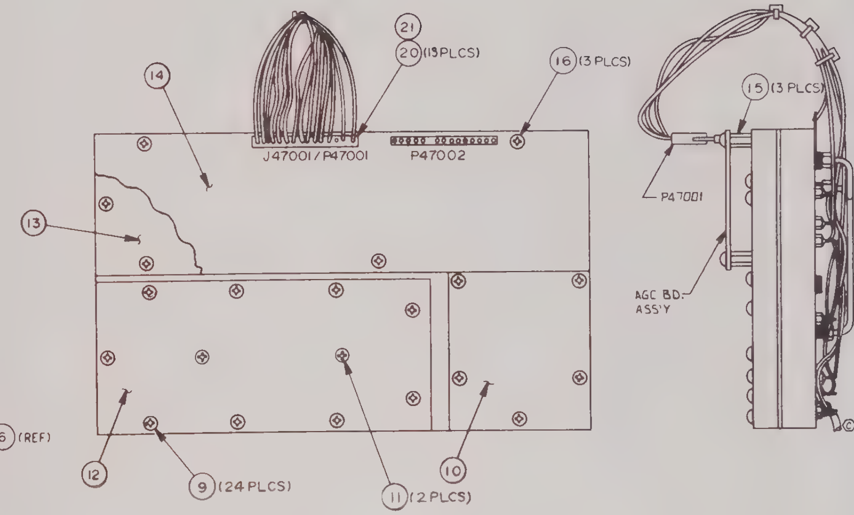

NOTES:

1. ALL REF NO'S CARRY AN ASSIGNED DESIGNATOR SERIES. THIS DWG CARRIES SERIES 48XXX (eg. FL1 IS FL48001)
2. REF SCHEMATIC INTERCONNECT 0000-4912-900
3. LAST ITEM NO USED: 22
4. ITEM NO'S NOT USED: 5
5. Ⓒ LAST REF DES NO USED: GL2, E4, R1, C1, J11, FL18
6. REF DES NOT USED: J3, J5, J6, J9, FL10
7. Ⓒ ◁7 CONNECTION TO J25006 OCCURS AT COMPOSITE LEVEL.

ASSEMBLY INSTRUCTIONS

1. INSTALL FEEDTHRU'S, RF CONNS, & COAX ASS'YS (ITEM ③ & ④) ON C-BORE SIDE OF VCO CORE BLOCK (ITEM ①).
2. POSITION VCO CORE BLOCK WITH FEEDTHRU COMPONENTS FACE DOWN. ALIGN PC BD'S (ITEMS ⑥, ⑦ & ⑧) ON TOP OF CORE BLOCK SO THAT FEEDTHRU COMPONENT LEADS CAN ENTER THE PC BD'S AT THE PROPER POINTS AS SHOWN ON THIS DWG.
3. USE LAYOUT TEMPLATES TO POSITION & SECURE PC BD'S IN PROPER POSITION AS FOLLOWS:
   0900-4955-200 TEMPLATE WITH ITEM ⑦
   0900-4955-300 TEMPLATE WITH ITEM ⑥
   0900-4955-700 TEMPLATE WITH ITEM ⑧
   INSERT SCREWS (ITEM ⑨) & TIGHTEN TO SPECS.
4. SOLDER ALL FEEDTHRU COMPONENTS.
5. INSTALL COMPONENTS, FOUND ON SHEET 2, ONTO PC BD'S (NOT ALL COMPONENTS CAN BE INSTALLED AT THIS TIME).
6. REMOVE LAYOUT TEMPLATES & INSTALL REMAINING COMPONENTS ONTO PC BD'S.
7. Ⓒ SUBMERSE AND BRUSH CLEAN IN UNCONTAMINATED SOLVENT. DO NOT USE VAPO-KLEEN MACHINE.
8. INSTALL COVERS (ITEMS ⑩ ⑫ + ⑬) AND SECURE THEM IN PLACE WITH ITEM ⑨ (SCREWS).
9. ASSEMBLE COMPLETED CORE BLOCK INTO VCO NO. 2 MECH ASS'Y

DASH NO	REF DES SERIES	NEXT ASSY	MODEL
Ⓒ -400	48000	7005-4941-300	RD-301

APPLICATION

-IFR INC-

DRAWN J SIGLER

TITLE MECH ASS'Y VCO NO 2

RD-301 (49-424)

SIZE D 7005-4942-400 REV G

SCALE 1:1 SHEET 1 OF 2

CHANGE	APVD
SEE SHT I FOR REVISIONS	

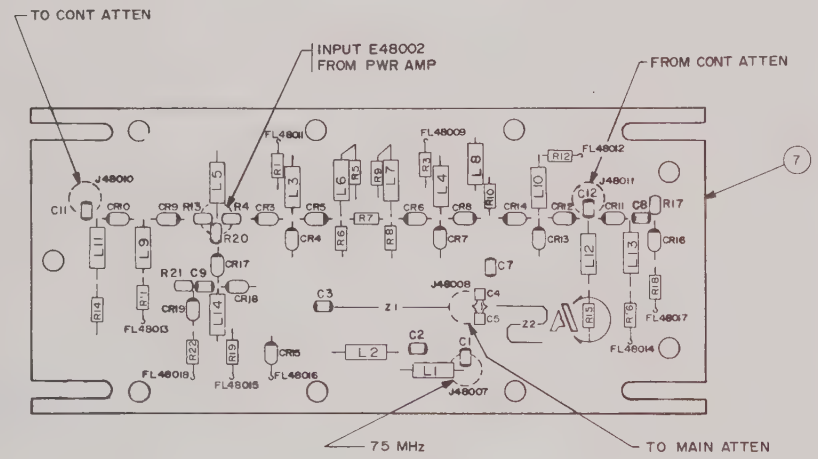

CONTOUR DIODE SW/DIPLEXER

REF DES SERIES 44XXX
REF SCHEMATIC 0000-4912-400

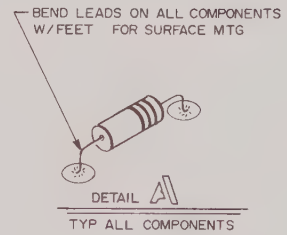

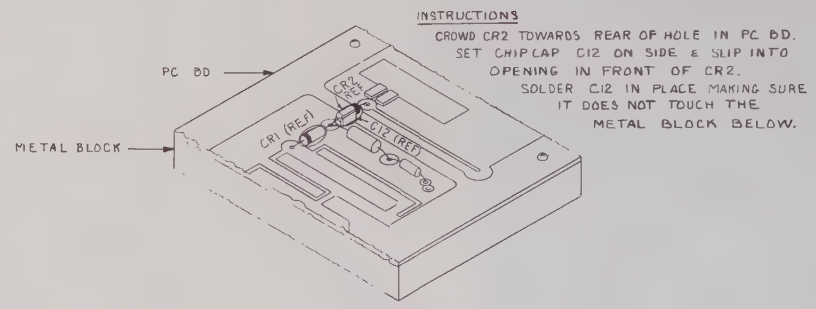

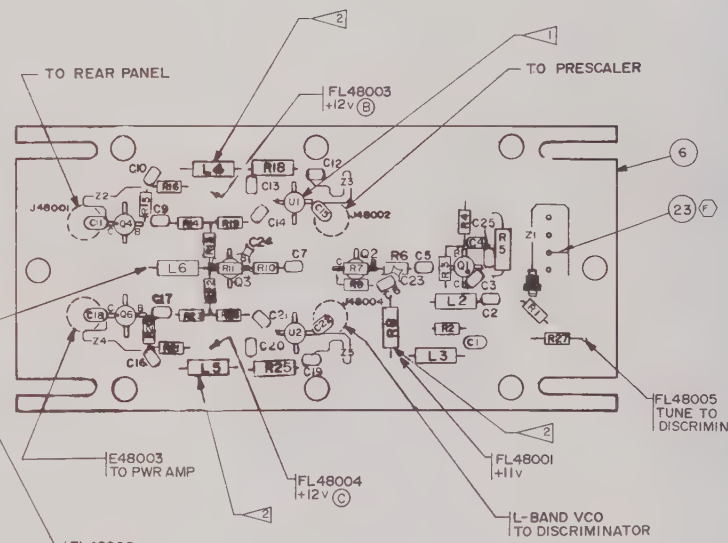

VCO/SPLITTER

REF DES SERIES 46XXX
REF SCHEMATIC 0000-4912-400

ASSEMBLY NOTES

1. NOTE POSITION OF SLANTED LEAD FOR U1 & U2
2. L4, L5 & R8 MUST BE INSTALLED AFTER FIXTURE (TEMPLATE) IS REMOVED.

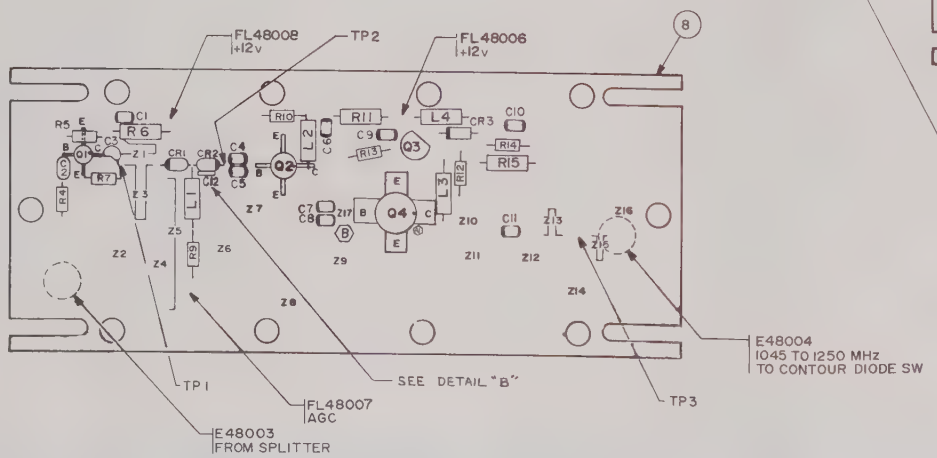

PWR AMP

REF DES SERIES 45XXX
REF SCHEMATIC 0000-4912-400

SEE SHT I FOR NOTES AND SPECIFICATIONS

DASH NO	REF DES SERIES	NEXT ASSY	MODEL
APPLICATION		7005-4941-300	RD-301

-IFR INC- 10800 West York Street Wichita Kansas 67215

DRAWN	J SIGLER 12/9/85	TITLE	MECHANICAL ASS'Y VCO Nº 2
CHECKED	12-23-85		RD-301 (49-424)
APPROVED	E Wheeler 12-24-85	SIZE D	DWG NO 7005-4942-400 REV G
		SCALE 2:1	CODE IDENT 91150 WEIGHT SHEET 2 OF 2

(14)

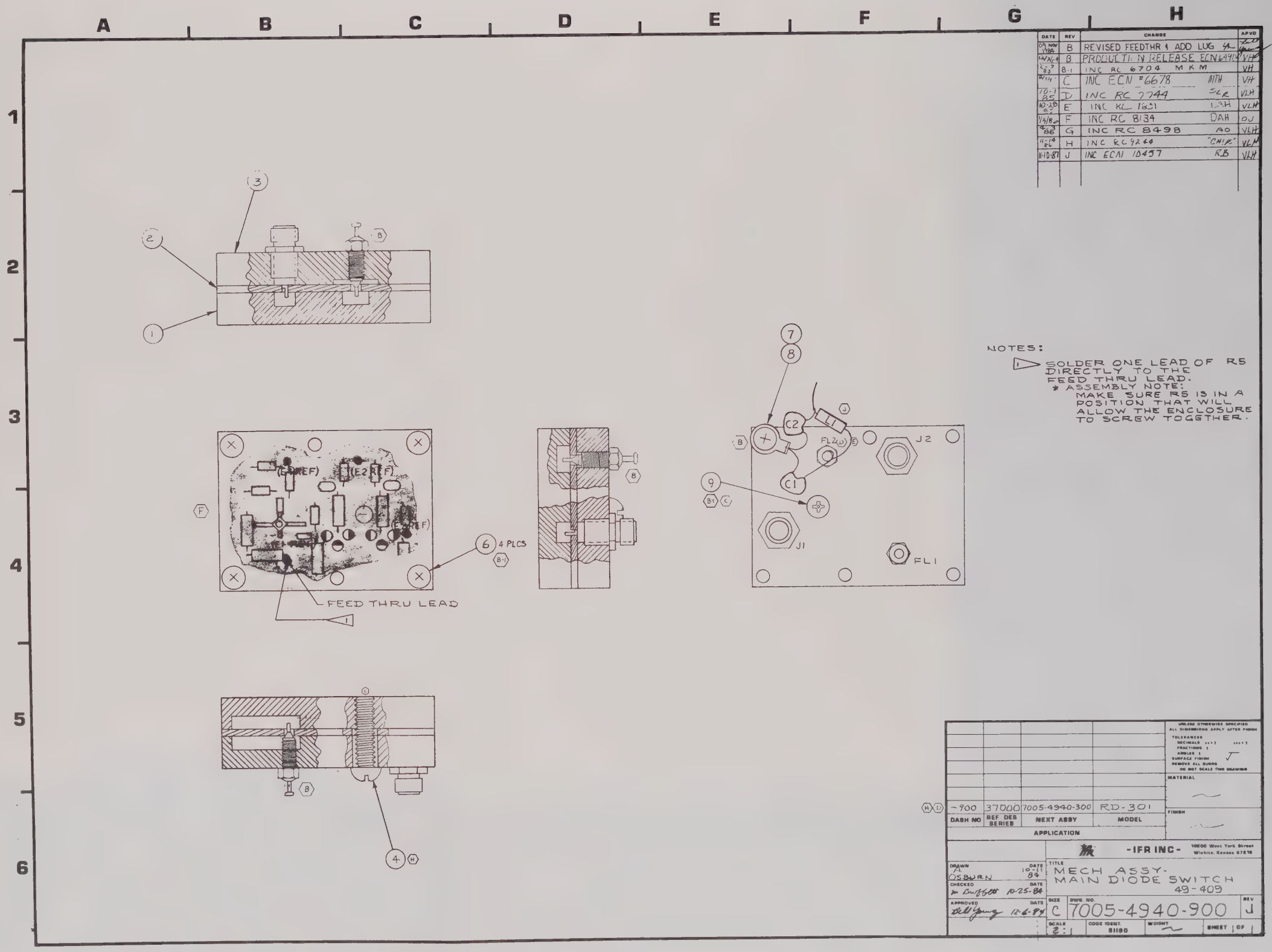

DATE	REV	CHANGE		APVD
09 NOV 1984	B	REVISED FEEDTHR & ADD LUG		
12/24/84	B	PRODUCTION RELEASE ECN 6491		VH
2-7-85	B-1	INC RC 6704 MKM		VH
4/1/85	C	INC ECN #6678	MTH	VH
10-1-85	D	INC RC 7744	SLR	VLH
10-28-85	E	INC RC 7831	DAH	VLH
1/9/86	F	INC RC 8134	DAH	OJ
4-3-86	G	INC RC 8498	AO	VLH
11-14-86	H	INC RC 9244	"CHIP"	VLH
11-10-87	J	INC ECN 10457	RB	VLH

NOTES:

1. SOLDER ONE LEAD OF R5 DIRECTLY TO THE FEED THRU LEAD.
   * ASSEMBLY NOTE: MAKE SURE R5 IS IN A POSITION THAT WILL ALLOW THE ENCLOSURE TO SCREW TOGETHER.

DASH NO	REF DES SERIES	NEXT ASSY	MODEL
-900	37000	7005-4940-300	RD-301

APPLICATION

UNLESS OTHERWISE SPECIFIED ALL DIMENSIONS APPLY AFTER FINISH
TOLERANCES
DECIMALS ±.XX ±.XXX
FRACTIONS ±
ANGLES ±
SURFACE FINISH √
REMOVE ALL BURRS
DO NOT SCALE THIS DRAWING

MATERIAL ~

FINISH ~

-IFR INC- 10200 West York Street Wichita, Kansas 67215

DRAWN A. OSBURN DATE 10-11-84
CHECKED [signature] DATE 10-25-84
APPROVED [signature] DATE 12-6-84

TITLE MECH ASSY- MAIN DIODE SWITCH 49-409

SIZE C DWG. NO. 7005-4940-900 REV J

SCALE 2:1 CODE IDENT. 51180 WEIGHT ~ SHEET 1 OF 1

SECTION 5 - PC BOARD DRAWINGS

5-1 GENERAL

This section includes component layout drawings for all printed circuit boards and modules with components mounted directly in blocks for the RD-301. Drawing titles are arranged in alphabetical order while figure numbers are assigned generally in the sequence where first used in the procedures.

If a PC board has components located on both sides of the board, both top and bottom views of that PC board are shown. Otherwise, only the side with components is shown.

The drawings in this section are not intended for use in ordering spare or replacement parts. Refer to the Bills of Material corresponding with the PC boards in Section 7 for part numbers.

NOTE:

Series Reference Designator numbers are not included with these drawings. Series Reference Designators are indicated with Schematic Drawings corresponding with each PC board in Section 6.

5-2 ALPHABETICAL INDEX OF PC BOARDS

TITLE	DRAWING NO.	PAGE
AGC Board	7010-4932-700	5-10
Counter Display	7010-2517-800	5-13
Counter Gating Details	7010-2518-000	5-14
Counter Logic	7010-4931-600	5-15
Detector Buffer Power Circuit, Pulse Distributor	7010-4930-100	5-4
Discriminator Bd. #1	7010-4932-800 (2 Sheets)	5-20, 5-21
Discriminator Bd. #2	7010-4931-300	5-25
Filter, 475 MHz	7010-4931-200	5-22
Filter, 570-800MHz	7010-4931-100 (2 Sheets)	5-23, 5-24
IF Generator Power Amp	7010-4931-500	5-17
IF and Marker Oscillators	7010-4931-400	5-7
Main Diode Switch	7010-4930-000	5-12
Modulation Mode Switch	7010-4931-700	5-11

TITLE	DRAWING NO.	PAGE
Power Supply, 170 VDC	7010-0016-000	5-3
Prescaler	7010-4930-500	5-16
Range Bd. #1	7010-4930-300	5-5
Range Bd. #2	7010-4931-000	5-18
Range Digitizer Switch	7010-4930-800	5-6
Range Discrete Assembly	7010-4930-900	5-19
RF Mode Switch	7010-4930-700 (2 Sheets)	5-8, 5-9

DATE	REV	CHANGE	APVD
10/16/86	D	REDRAWN PER RC 9010 DAH	
4.13.87	E	INC RC 9744 RB	VLH

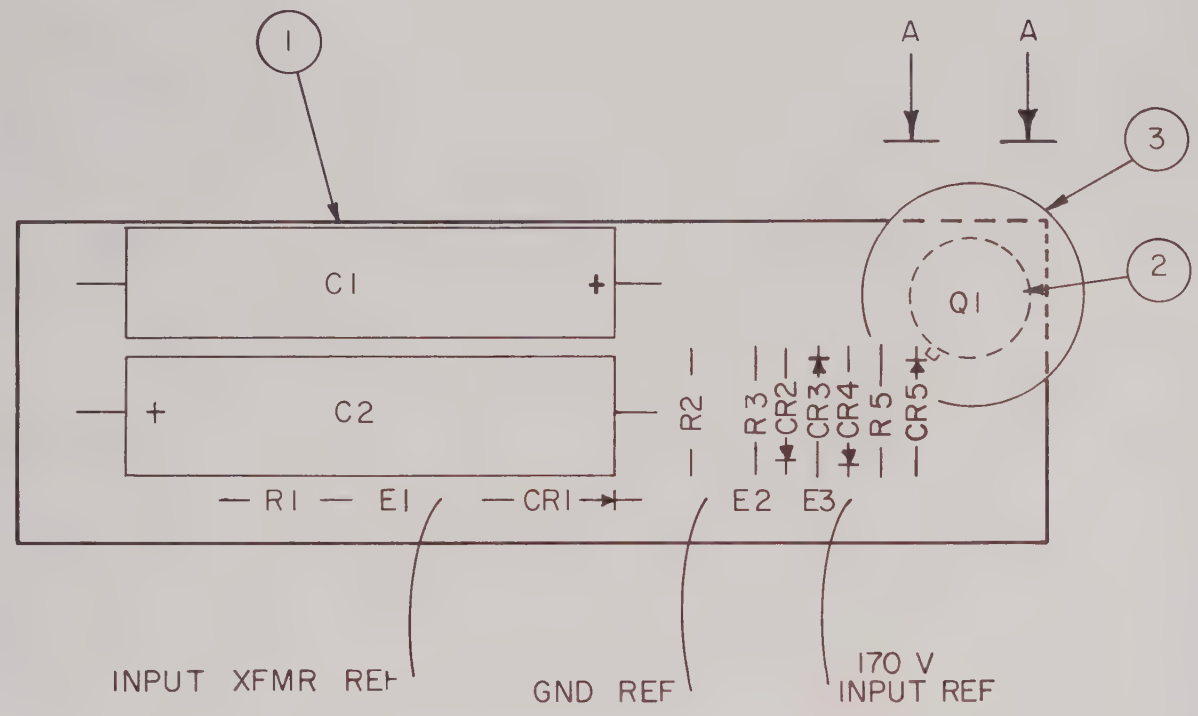

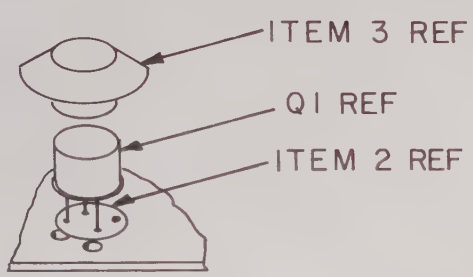

VIEW A–A
NO SCALE

NOTES:

1. COMPONENT LEADS MAY EXTEND .04 TO .06 BEYOND THE BOTTOM OF THE BOARD AFTER SOLDERING.
2. MAXIMUM HEIGHT OF COMPONENTS TO BE .35 FROM COMPONENT SIDE OF BOARD.
3. MOUNT Q1 ON MOUNTING PAD(ITEM 2) AND COVER WITH CAP (ITEM 3).
4. PC BOARD IS PLATED ON ONE SIDE ONLY & COMPONENTS ARE MOUNTED ON THE NON-PLATED SIDE ONLY.

TOLERANCES: (UNLESS OTHERWISE SPECIFIED)

ALL DIMENSIONS APPLY AFTER FINISH

TOLERANCES:
DECIMALS: .xx = ± .xxx = ±
ANGLES: ±
SURFACE FINISH:
REMOVE ALL BURRS

MATERIAL

FINISH

DRAWN	JNV	2/2/77
CHECKED	RKK	2/8/77
APPROVED	MD	2/10/77

IFR SYSTEMS INC
10200 West York St., Wichita, Kansas 67215

TITLE: PC BOARD ASS'Y
170 VDC POWER SUPPLY (E)

SIZE	DWG. NO.	REV
B	7010-0016-000	E

SCALE: OR AS NOTED	DO NOT SCALE THIS DRAWING	FSCM CODE	SHEET / OF
2:1		51190	1 / 1

DATE	REV	CHANGE	APVD
	A	PROTOTYPE RELEASE	
7/16/84	B	U3, PIN 3 TO GND. J6 FROM 5 PIN TO 6 PIN CONN., C4 PAD SPACING TOO SHORT, Q4 & Q5 NOT CONN. RIGHT ON PC BD, C4 CHANGED TO 33 µf	
11/1/84	B	PRODUCTION RELEASE ECN 6490	VH
3/7/85	B-1	INC RC 6707 MKM	VH
9/10/85	C	INC ECN 6752 MTH	MTH
7/11/86	C-1	INC ECN 6752 REVISE MTH	VLH
8-26-86	C-2	INC ECN 7520 AO	VLH
11-20-86	C-3	INC ECN 7897 AO	VLH
1/14/87	C-4	INC RC 8097 & RC 8210 DAH	JS
11-20-87	C-5	INC ECN 9157 JS	VLH
12-19-88	C-6	INC ECN 9336 JM	VLH

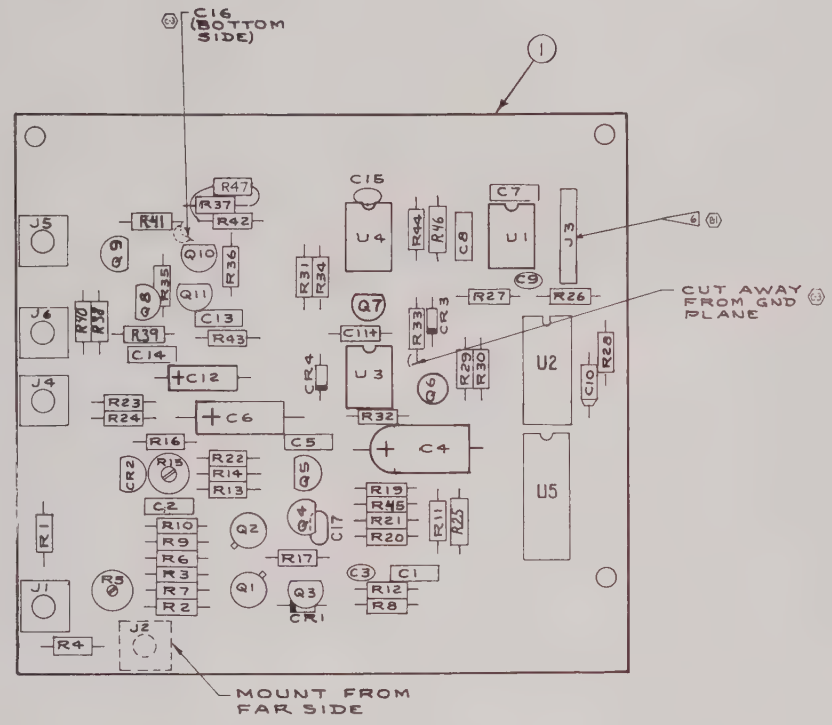

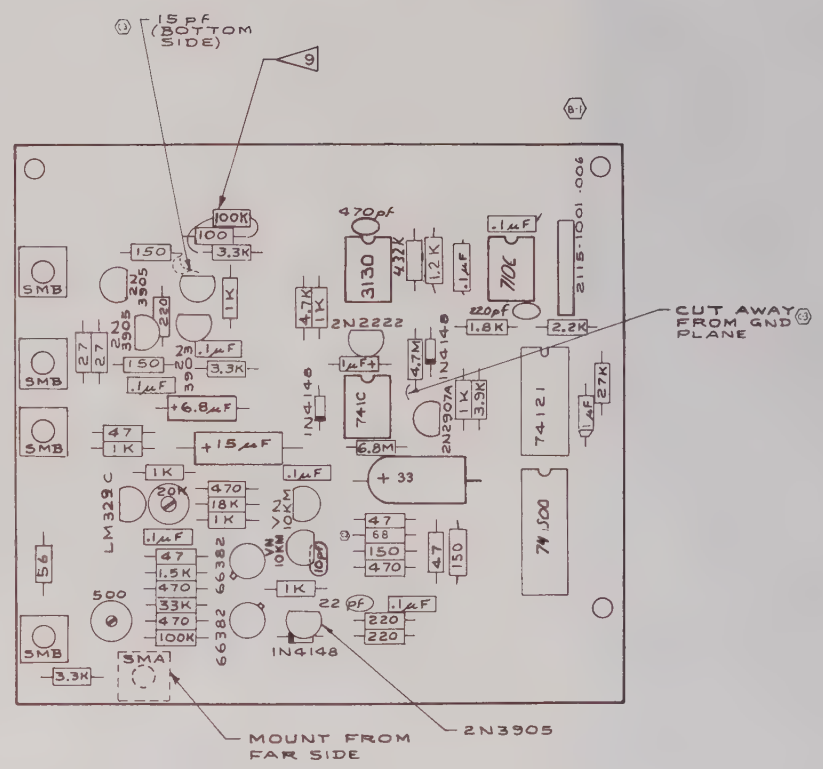

VIEW SHOWING COMPONENT PART NUMBERS OR VALUES

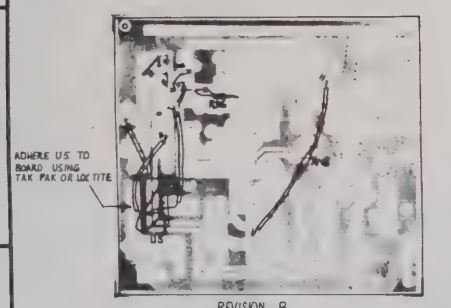

REVISION B
SCALE 1:1
BOTTOM

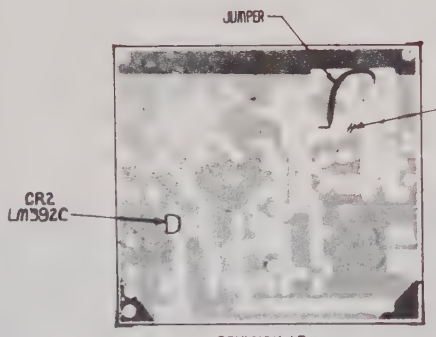

REVISION "B"
SCALE 1:1
TOP

NOTES

1. ALL REF. NOS CARRY AN ASSIGNED DESIGNATOR SERIES. THIS ASSY CARRIES SERIES 17XXX. (e.g., R1 IS R17001)
2. ALL RESISTORS ARE ¼ W, 10%.
3. ALL RESISTANCE IS EXPRESSED IN OHMS.
4. ALL CAPACITANCE IS EXPRESSED IN MICROFARADS.
5. LAST REF NO USED:
   C16 Q11
   CR4 R47
   J6 U5

(B-1) ◁6 J3-4 IS REMOVED FOR KEY PIN

7. REF. NO. NOT USED: R18
8. LAST ITEM NO USED: 1

(C-5) ▷9 R47 IS S.A.T. (SELECT AT TEST). NOMINAL VALUE: 100K
RANGE VALUE: 82K TO 150K

DASH NO	REF DES SERIES	NEXT ASSY	MODEL
-100	17000	7005-4940-300	RD-301

APPLICATION

-IFR INC- 10800 West York Street Wichita Kansas 67215

DRAWN: O'BURN 8-20-84
CHECKED: 10-29-84
APPROVED: Bill Young 10-31-84

PC BOARD ASSY- DETECTOR BUFFER, PWR CKT, PULSE DIST. 43-301

SIZE D | DWG NO 7010-4930-100 | REV C-6

SCALE 2:1 | CODE IDENT 81180 | WEIGHT | SHEET 1 OF 1

DATE	REV	CHANGE		APVD
3-29-84	A	PROTOTYPE RELEASE		[illegible]
1/14/85	B	PRODUCTION RELEASE	ECN 6490	VH
3-25-85	C	INC ECN #6838	R.W.	[illegible]
3-25-85		INC RC #6835	R.W.	
8-1-85	C-1	INC ECN 7241	AO	JS
12-22-85	C-2	INC RC 7695	SLR	VLH
10/11/85	C-3	INC RC 7797	JS	[illegible]
8/1/86	C-4	INC RC 8127	DAH	OW
1/15/86	C-5	INC RC 8097	DAH	JS
2-6-86	C-6	INC ECN 7631	JS	VLH
1-27-87	C-7	INC ECN 9461	"CN:PS"	VLH
3-24-88	D	INC RC 10864	AO	VLH

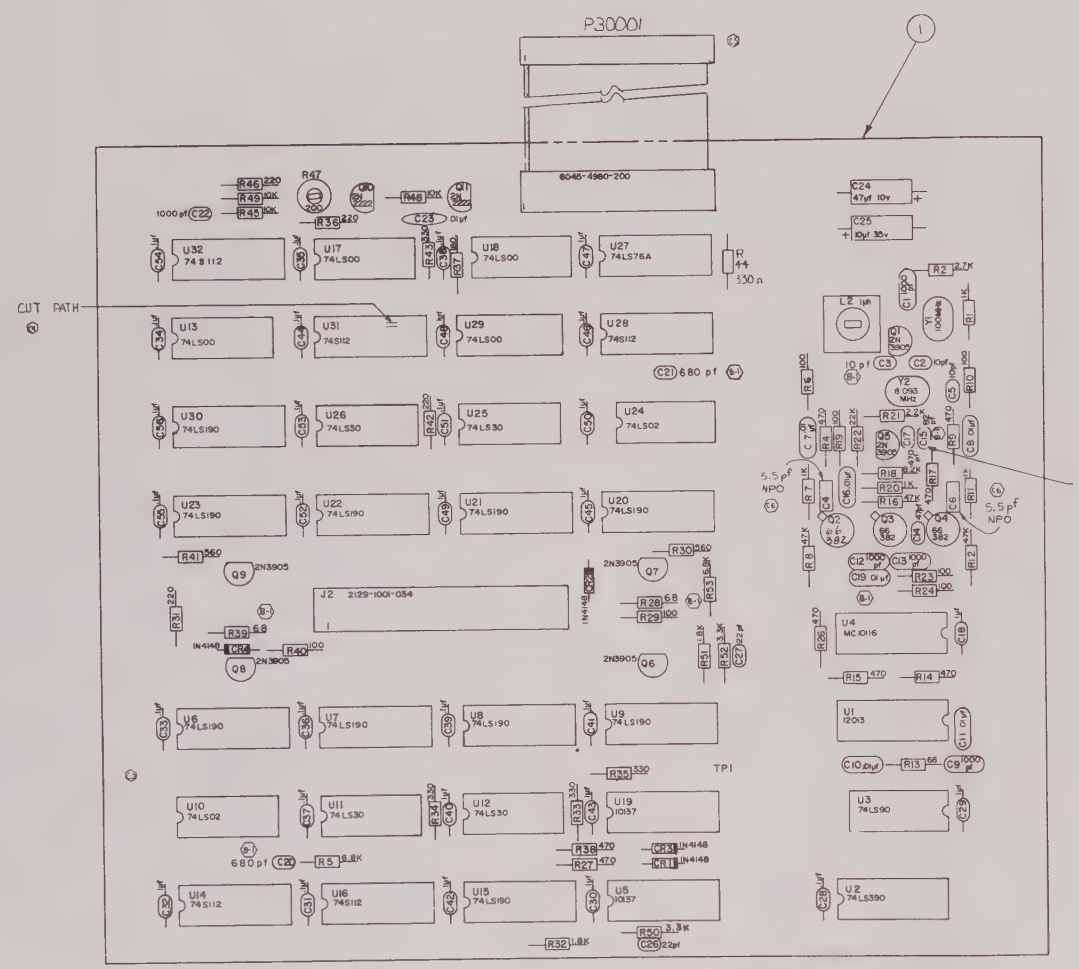

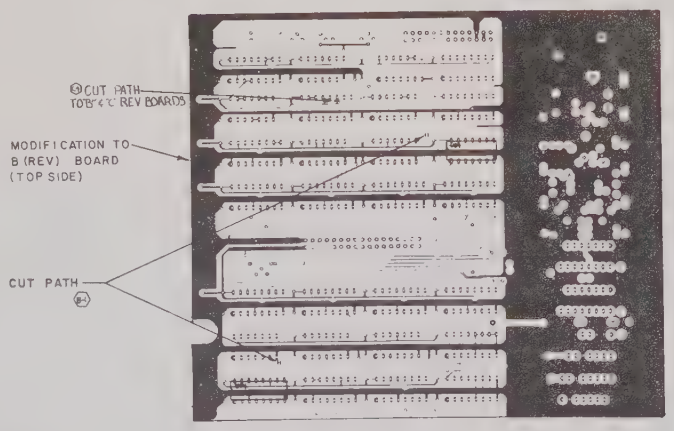

NOTE:

1. ALL REF Nº's CARRY AN ASSIGNED DESIGNATOR SERIES. THIS DRAWING CARRIES SERIES 19XXX. (i.e. R1 is R19001)
2. ALL RESISTORS ARE 1/4w, 5 %, UNLESS OTHERWISE SPECIFIED
3. ALL RESISTANCE IS EXPRESSED IN OHMS.
4. REFERENCE SCHEMATIC DRAWING Nº 0000-4910-300

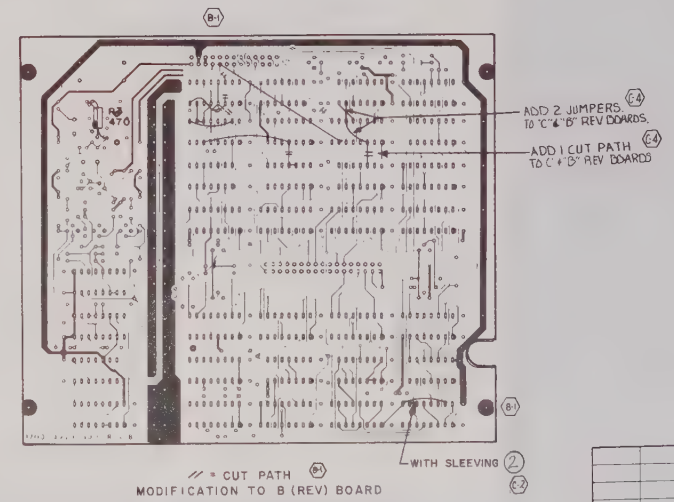

// = CUT PATH
MODIFICATION TO B (REV) BOARD

JUMPER WIRE LOCATION DETAIL
(ALL JUMPERS TO BE OF 26ga BUSS WIRE
DPN 1050-0000-075 WITH
SLEEVING, 26GA TFE TUBING
DPN 6011-0018-001)
(BOTTOM SIDE)

DASH NO	REF DES SERIES	NEXT ASSY	MODEL
-300	19000	7005-4940-600	RD 301

APPLICATION

-IFR INC-
10800 West York Street
Wichita, Kansas 67215

DRAWN L. A. Meis, Jr. DATE 15 Dec '84
CHECKED DATE 1-14-85
APPROVED DATE 1-14-85

TITLE P.C. BOARD ASSY RANGE BOARD Nº 1

SIZE D DWG NO 7010-4930-300 REV D
SCALE 2:1 CODE IDENT 51180 WEIGHT SHEET 1 OF 1

DATE	REV	CHANGE	APVD
	A	PROTOTYPE RELEASE	
	B	REVISED & REDRAWN	
10/29/84	C	ADD NEW ARTWORK	
10-30-84	C	PRODUCTION RELEASE ECN 6490	VH
9-15-85	C-1	INC RC 6879 RW	VLH
10/4/86	C-2	INC RC 9078 DAH	VLH

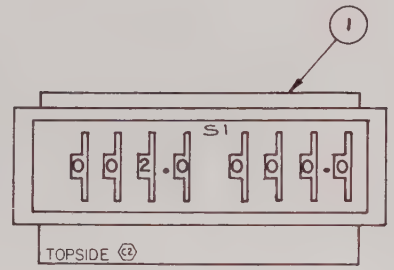

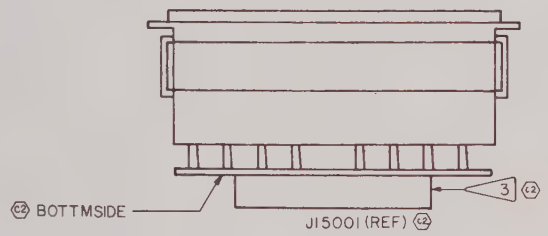

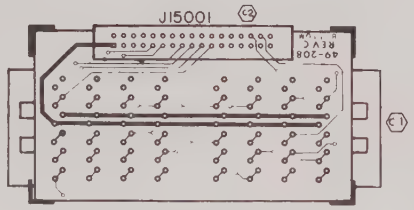

NOTES

1. ALL REF NO'S CARRY AN ASSIGNED DESIGNATOR SERIES. THIS ASSY CARRIES SERIES 15XXX. (e.g., R1 IS R15001)
2. LAST REF NO USED
   J1
   S1

(C2) 3 PIN 1 IS INDICATED BY SQUARE PAD.

UNLESS OTHERWISE SPECIFIED ALL DIMENSIONS APPLY AFTER FINISH
TOLERANCES
DECIMALS .xx ± .xxx ±
FRACTIONS ±
ANGLES ±
SURFACE FINISH √
REMOVE ALL BURRS
DO NOT SCALE THIS DRAWING

MATERIAL ~

FINISH ~

DASH NO	REF DES SERIES	NEXT ASSY	MODEL
	10XXX	7005-4940-100	RD-301

APPLICATION

-IFR INC- 10200 West York Street Wichita, Kansas 67215

DRAWN A OSBURN 9-7-84
CHECKED WP 10/29/84
APPROVED Bill Young 10-30-84

TITLE PC BOARD ASSY-RANGE DIGIT SW BD 49-308

SIZE C | DWG NO. 7010-4930-800 | REV C-2

SCALE 1:1 | CODE IDENT 51190 | WEIGHT ~ | SHEET 1 OF 1

DATE	REV	CHANGE		APVD
1-85	–	PRODUCTION RELEASE ECN6490		VH
85	A1	INC RC 6825	RW	VLH
[illegible]	A2	INC RC [illegible]	MTH	DS
4-9-85	A3	INC RC 7507	AO	DS
[illegible] 85	A4	INC RC 7656	BA	VLH
9/24/85	A5	[illegible]	VLH	CLR
9/24/86	A6	INC RC 7677		
1/4/86	A7	INC RC 8094, RC 8212	DAH	DS
9/1/86	A-8	INC ECN8464	DAH	VLH
3/16/87	A-9	INC RC 9649	RB	VLH
3/88	B	INC ECN 10890	AO	VLH

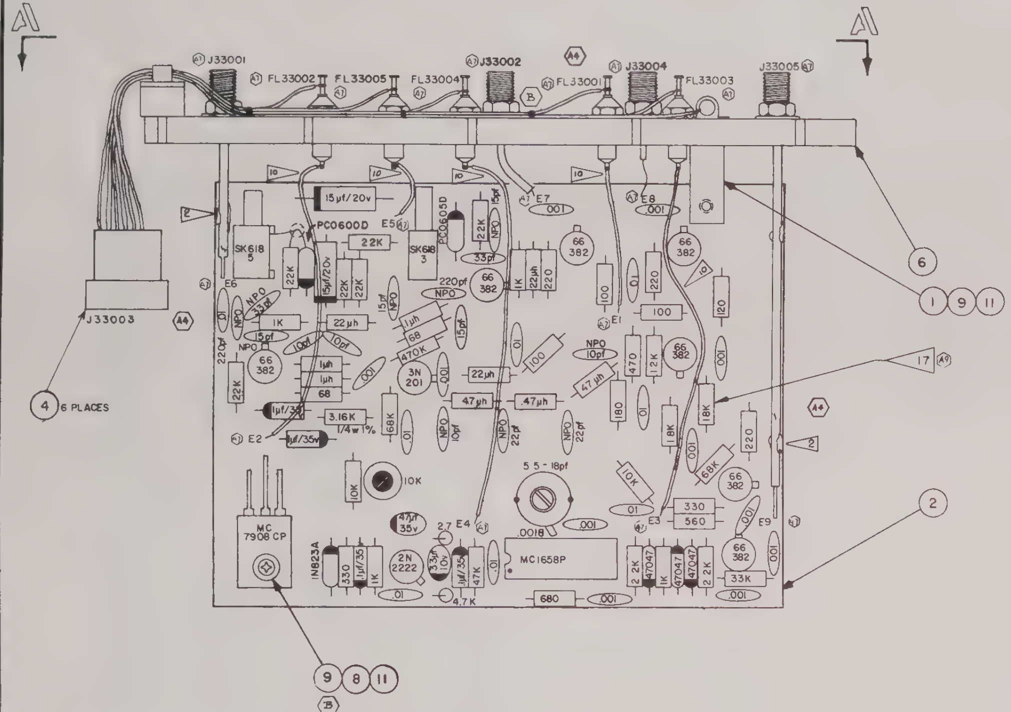

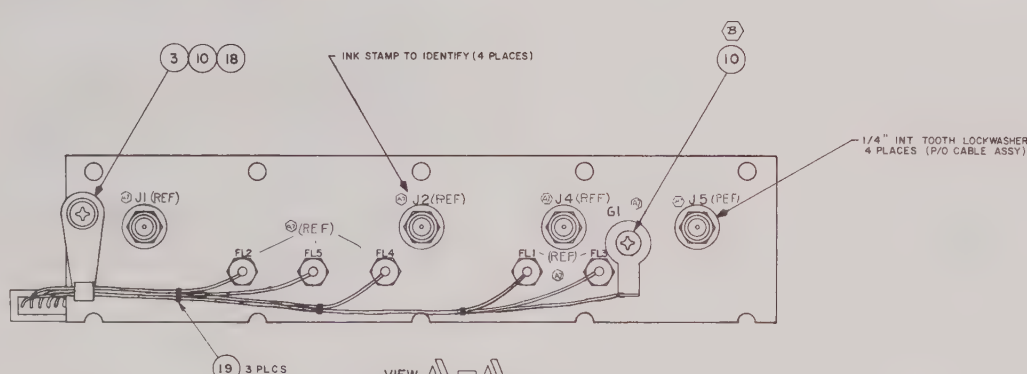

VIEW A–A

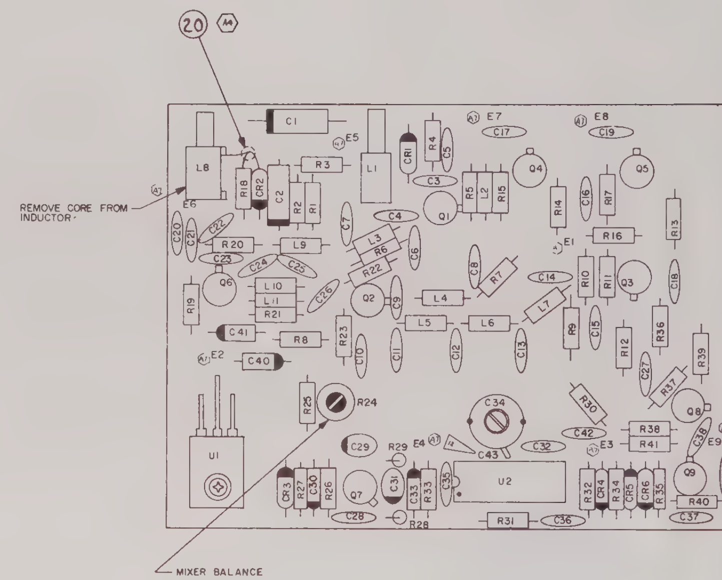

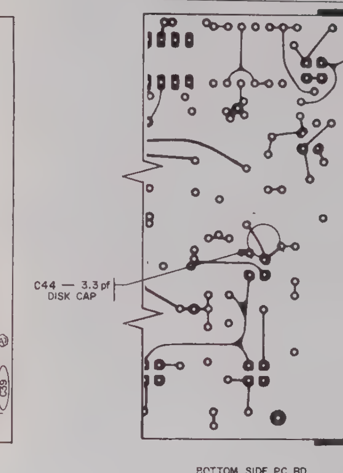

BOTTOM SIDE PC BD

WIRING LIST				
FROM	TO	COLOR	SIZE	LENGTH
J3-1	FL1	RED	11	5.5
J3-2	FL2	YELLOW	11	3.5
J3-3	FL5	WHITE	11	4
J3-4	FL4	BLUE	11	4.5
J3-5	FL3	GRAY	11	6
J3-6	gnd lug	BLACK	11	6.5

NOTE

1. REFER TO ASSY PROCEDURE Nº 1-34-0100-2 FOR PROPER RIGID COAX ASSY INSTRUCTIONS INSPECT PER CHECKOUT PROCEDURE LISTED BELOW
2. ATTACH RIGID COAX ASSY's TO PC BD AS FOLLOWS:
   a. LIGHTLY SAND OUTER JACKET OF COAX WITH 400 GRIT SANDPAPER TO REMOVE OXIDATION AND OTHER CONTAMINATES
   b. SOLDER COAX JACKET TO PC BD USING NO MORE THAN ABOUT A 40w SOLDERING IRON AND HEAT COAX FOR AS SHORT A PERIOD OF TIME AS POSSIBLE. LIQUID FLUX MAY BE USED IF NECESSARY. (DO NOT USE SOLDERING PASTE)
3. ALL RESISTORS ARE 1/4w, 5% TOL., UNLESS OTHERWISE SPECIFIED.
4. ALL CAPACITORS ARE IN µf UNLESS OTHERWISE SPECIFIED.
5. COMPONENT LEADS MAY EXTEND .04 - .06 BEYOND BOTTOM OF BOARD AFTER SOLDERING
6. MAX HT OF COMPONENTS TO BE .60 FROM COMPONENT SIDE OF BOARD
7. SCHEMATIC DWG Nº 0000-4911-400
8. P.C BOARD P/N 1700-2507-100.
9. REFERENCE DESIGNATOR SERIES FOR COMPONENTS ON THIS DWG IS 33XXX (i.e. R11=R33011; CR2=CR33002; etc.)
10. ALL ANNOTATED WIRE LENGTHS TO BE 26 awg (6003-0000-010).
11. ALL ANNOTATED WIRE LENGTHS TO BE 26 awg TEFLON COVERED WIRE
12. C43 CONNECTS FROM PIN 13 OF U2 TO GND
13. LAST REF NO'S USED: [illegible], C44, U2, L11, CR6, R41, Q9, FL5, G1
14.

CHECKOUT PROCEDURES

CHECK FOR PROPER COAX CONTINUITY AFTER COMPLETION OF THE BOARD AS FOLLOWS

1. USE A "MIDLAND" VOM MODEL 23-107 OR EQUIVALENT.
2. SELECT THE "R x 1" SCALE SETTING ON THE METER & CHECK TO SEE THAT THE METER IS PROPERLY ZEROED AT BOTH ENDS OF THE SCALE
3. PLACE THE POSITIVE (RED) LEAD ON THE CENTER CONDUCTOR OF THE CONNECTOR & THE COMMON (BLACK) LEAD ON THE CENTER CONDUCTOR OF THE COAX WHERE IT ENTERS THE BOARD. THIS SHOULD OBTAIN A READING OF Ø OHMS ON BOTH COAX CABLES.
4. PLACE THE POSITIVE (RED) LEAD ON THE CENTER CONDUCTOR OF THE CONNECTOR & THE COMMON (BLACK) LEAD ON THE LARGE COPPER AREA ON TOP OF THE BOARD (GROUND). THIS SHOULD OBTAIN NO READING AT ALL ON BOTH COAX CABLES

NOTE: (cont.)

17. R36 IS SELECTED AT TEST (S.A.T.) COMPONENT. NOMINAL VALUE: 8.2K, RANGE VALUE: 4.7K-12K

DASH NO	REF DES SERIES	NEXT ASSY	MODEL
-400	33000	7003-4940-000	RD 301 (A-1)

APPLICATION

UNLESS OTHERWISE SPECIFIED ALL DIMENSIONS APPLY AFTER FINISH
TOLERANCES
MATERIAL
FINISH

-IFR INC- 10200 West York Street Wichita Kansas 67215

DRAWN L.A Meis, Jr DATE 30 NOV'84
CHECKED VB DATE 1-11-85
APPROVED Bill Young DATE 1-14-85

TITLE PC BOARD ASSEMBLY IF MARKER/OSCILLATOR RD 301

SIZE D DWG NO 7010-4931-400 REV B
SCALE 2:1 CODE IDENT 51190 WEIGHT SHEET 1 OF 1

DATE	REV	CHANGE	APVD
	C		
1/9/84	D	REVISED & ADD NEW ARTWORK	
10/29/84	D	PRODUCTION RELEASE ECN 6490	VH
2/7/85	D-1	INC AC 6705 M K M	VH

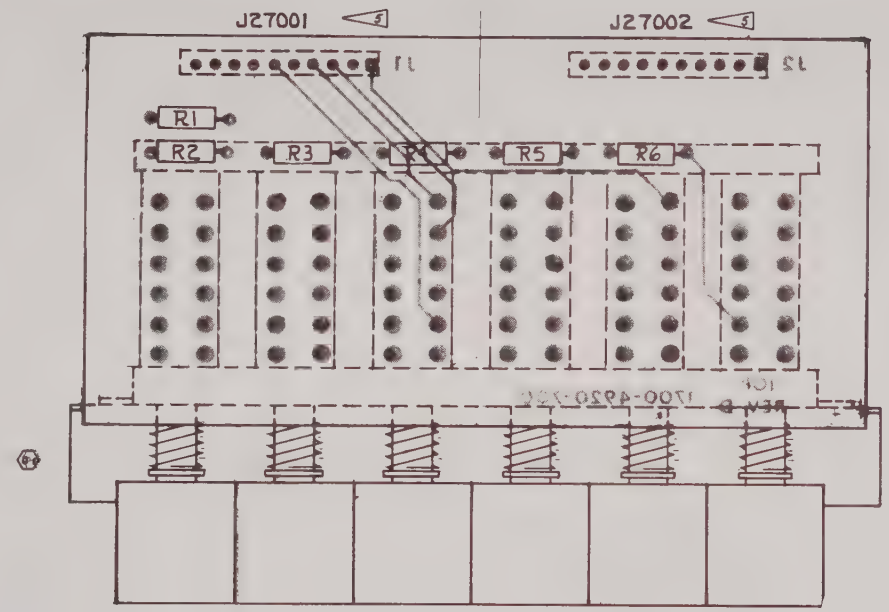

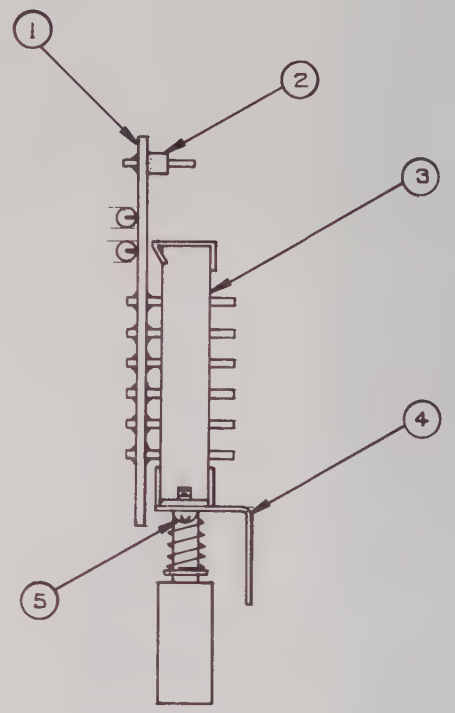

NOTES:

1. ALL REF NO'S CARRY AN ASSIGNED DESIGNATOR SERIES. THIS ASS'Y CARRIES 27XXX. (e.g.. R1 IS R27001)
2. ALL RESISTORS ARE 1/4W, 10%.
3. ALL RESISTANCE IS EXPRESSED IN OHMS.
4. LAST REF NO. USED:
   R6 J2

D-1 5 PINS REMOVED FROM J1-2 & J2-3 FOR KEYING PURPOSES

DASH NO	REF DES SERIES	NEXT ASSY	MODEL
	10XXX	7005-4940-100	RD-301

APPLICATION

UNLESS OTHERWISE SPECIFIED ALL DIMENSIONS APPLY AFTER FINISH
TOLERANCES
DECIMALS .XX ± .01 — .XXX ± .005
FRACTIONS ±
ANGLES ±
SURFACE FINISH √
REMOVE ALL BURRS
DO NOT SCALE THIS DRAWING

MATERIAL —//—

FINISH —//—

-IFR INC- 10200 West York Street Wichita, Kansas 67215

DRAWN	C.LYDAY	10-12-84
CHECKED		10-12-84
APPROVED		10-19-84

TITLE PCB ASSY
R.F. MODE SWITCH
(49-307)

SIZE	DWG NO.	REV
C	7010-4930-700	D-1

SCALE 2:1 | CODE IDENT 51180 | WEIGHT | SHEET 1 OF 2

DATE	REV	CHANGE	APVD
	C		
	D	REMOVE JUMPER & ADD REV. ARTWORK	
10/24/84	D	PRODUCTION RELEASE ECN 6490	VH
		SEE SHEET 1	

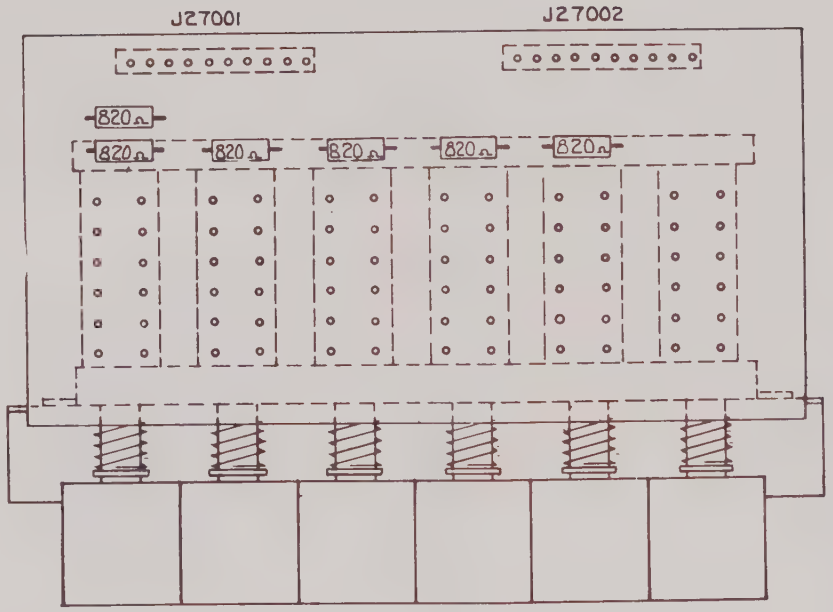

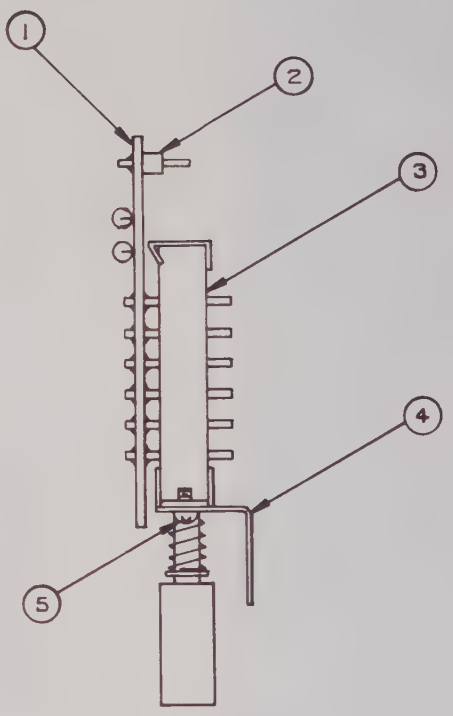

NOTES: SEE SHT 1 OF 2

DASH NO	REF DES SERIES	NEXT ASSY	MODEL
APPLICATION		10XXX 7005-4940-100	RD-301

UNLESS OTHERWISE SPECIFIED ALL DIMENSIONS APPLY AFTER FINISH
TOLERANCES
DECIMALS .xx ± — .xxx ±
FRACTIONS ±
ANGLES ±
SURFACE FINISH √
REMOVE ALL BURRS
DO NOT SCALE THIS DRAWING

MATERIAL —
FINISH —

-IFR INC- 10200 West York Street Wichita Kansas 67215

DRAWN	DATE	TITLE	
C. LYDAY	10-12-84	PCB ASSY R.F. MODE SWITCH (49-307)	
CHECKED	DATE		
	10-19-84		
APPROVED	DATE	SIZE DWG NO	REV
	10-19-84	C 7010-4930-700	D-1
		SCALE 2:1 CODE IDENT 81180 WEIGHT	SHEET 2 OF 2

DATE	REV	CHANGE	APVD
11 DEC 1985	B	PRODUCTION RELEASE PER ECN 8052	
1/9/86	B-1	ADDITIONS PER 8154 RC BJA	
2-10-86	B-2	INC ECN 8052	
6-11 86	C	INC ECN 8500	JS
7-2 86	C-1	INC RC 8751	JS
9-19 86	C-2	INC ECN 8983	JS
10-15 86	C-3	INC ECN 8500B	RD
12-1 86	D	INC AC 9254	JM
2-3 87	D-1	INC ECN 9429	RD
2-11 87	D-2	INC ECN 9496	JS
1-6-88	D-3	INC RC 10283	RB
1-6-88	E	INC RC 10411	RB

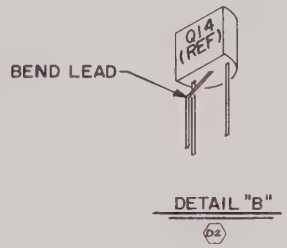

DETAIL "B"

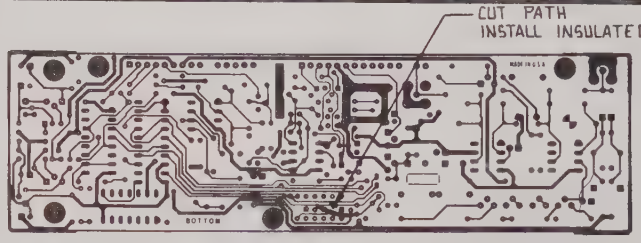

BOTTOM VIEW (D) REV

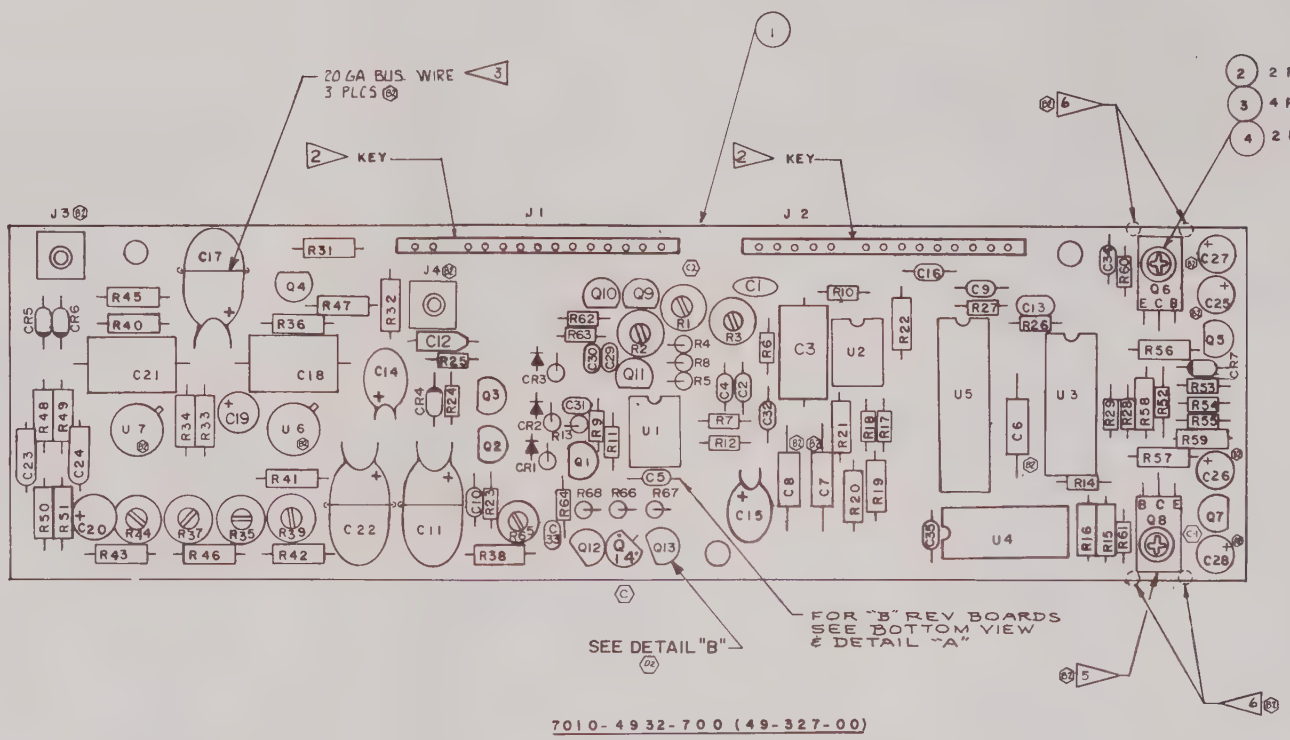

7010-4932-700 (49-327-00)

SHOWN

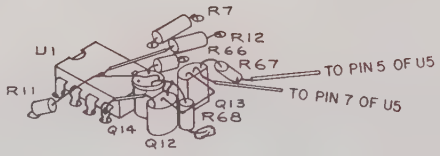

DETAIL A
FOR "B" REV BOARDS ONLY

SCALE: NONE

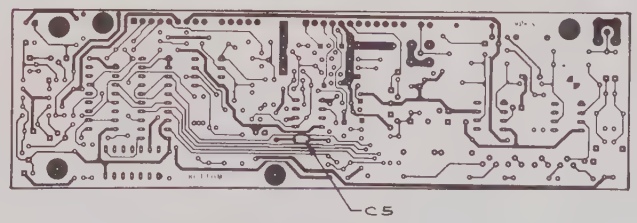

BOTTOM VIEW (FOR "B" REV BOARDS)

NOTES:

1. ALL REFERENCE NUMBERS CARRY AN ASSIGNED DESIGNATOR SERIES. THIS DRAWING CARRIES SERIES 47000 (eg., R1 IS R47001).
2. REMOVE ENTIRE PIN FROM CONNECTOR FOR KEYING.
3. ANCHOR CAPS TO BOARD USING 20GA. BUS WIRE DPN 1050-0000-072.
4. REF. SCHEMATIC 0000-4912-700
5. MOUNT Q6 & Q8 WITH METAL PLATE TO THE BOARD.
6. AREA SHOULD BE FREE OF GND PLANE.

DASH NO	REF DES SERIES	NEXT ASSY	MODEL
		7005-4942-400	RD-301

APPLICATION

UNLESS OTHERWISE SPECIFIED ALL DIMENSIONS APPLY AFTER FINISH
TOLERANCES DECIMALS .XX ± .XXX ± FRACTIONS ± ANGLES ± SURFACE FINISH REMOVE ALL BURRS DO NOT SCALE THIS DRAWING
MATERIAL
FINISH

-IFR INC- 10200 West York Street Wichita, Kansas 67215

DRAWN	B. ARNETT	9/27/85
CHECKED	W Wood	12-9-85
APPROVED		12/11/85

TITLE: PCB ASSY., AGC BOARD (49-327)

SIZE	DWG NO	REV
C	7010-4932-700	E

SCALE	CODE IDENT	WEIGHT	SHEET
2:1	51180		1 OF 1

DATE	REV	CHANGE	APP'D
3/27/85	A	PROD. RELEASE ECN 6490	
1/9/86	A-1	INC RC 7618 SLR	VLH
6/19/86	A-2	INC RC 8696 WAW	VLH

NOTES:

1. TIGHTEN SCREWS TO ≈ 5 IN LBS. APPLY A SMALL DROP OF "LOCTITE" #290 DPC1051-0100-200) AROUND THE HEAD OF EACH SCREW AFTER TIGHTENING
2. SOLDER WITH "KESTER" 63/37 WIRE SOLDER WITH "25+FFL
3. WASH WITH "ZEPRIDE" SOAP AND WATER.
4. DO NOT SUBMERGE SWITCH IN WATER.

5 > PIN 3 REMOVED FOR KEYING PURPOSES

A2 6 > AFTER ITEM (2) IS INSTALLED ON SWITCH, CLIP SWITCH PINS ON OPPOSITE SIDE OF SWITCH BY AT LEAST .125 IN (APPROX HALF OF PIN). REMAINING PINS SHOULD NOT EXCEED .15 IN.

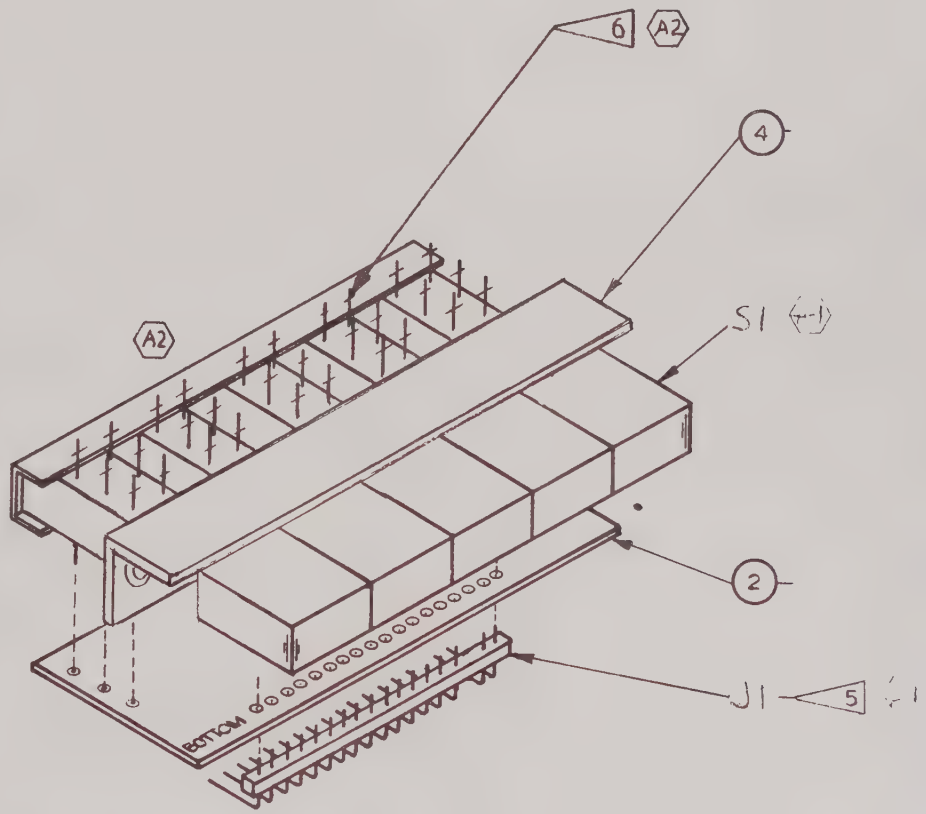

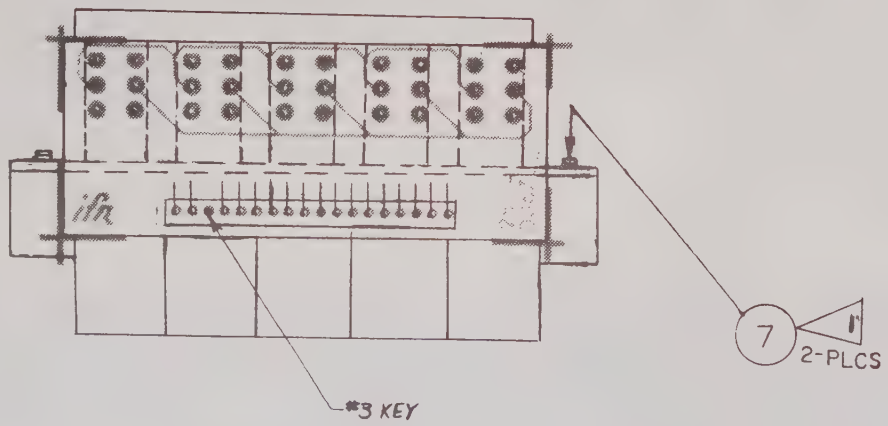

NOTE:

1. REF SCHEMATIC DWG Nº 0000-4911-700
2. REF DES SERIES ASSIGNED – 32XXX
3. ITEM Nº NOT USED.....1,6
A-1 4. LAST REF DES USED... S1,J1
A-1 5. LAST ITEM Nº USED... 7
A-1 6. ITEM Nº's NOT USED... 1,3,5,6

SEE SEPARATE B.O.M

ITEM	REQ'D	PART NO.	DESCRIPTION
7	2	4-40x3/16	PBHMS
5	1	22-05-2181	"MOLEX" (18) PIN CONN.
4	1	49-816	MTG. BRKT.
3	1	PB1170	"CENTRALAB" (5) SECT SWITCH
2	1	25-0067	P.C. BOARD
1	1	49-317	SWITCH ASS'Y. (MOD. MODE)

NEXT ASS'Y	QT'Y	MODEL
49-401	1	RD301

APPLICATION

LIST OF MATERIALS

TOLERANCES
UNLESS OTHERWISE SPECIFIED
ALL DIMENSIONS APPLY AFTER FINISH
DECIMALS: ± .005
ANGLES: ± 1/2°
FRACTIONS: ± 1/64
SURFACE ROUGHNESS 125
REMOVE ALL BURRS

DRAWN DATE 12-24-85
CHECKED DATE 2-11-85
APPROVED DATE 2/11/85

INSTRUMENT FLIGHT RESEARCH CORPORATION
WICHITA, KANSAS

TITLE
MODULATION MODE SWITCH ASS'Y.
49-317

MATERIAL NOTED
TREATMENT
FINISH

SIZE B | PART NUMBER 7010-4931-700 | REV A-2
SCALE NONE | WEIGHT | SHEET 1 OF 1

DATE	REV	CHANGE		APVD
10-24 84	B	PRODUCTION RELEASE-ECN6490		VH
2-8 85	C	INC ECN 6678	MTH	VH
9-9 85	C-1	INC ECN 7289	MKM	VLH
9-25 85	C-2	INC ECN 7703	VLH	SCR
10-1 85	C-3	INC ECN 7744	SCR	VLH
1-4 85	C-4	INC ECN 8134	DAH	OJ
4-9 86	C-5	INC ECN 8498	AO	VLH

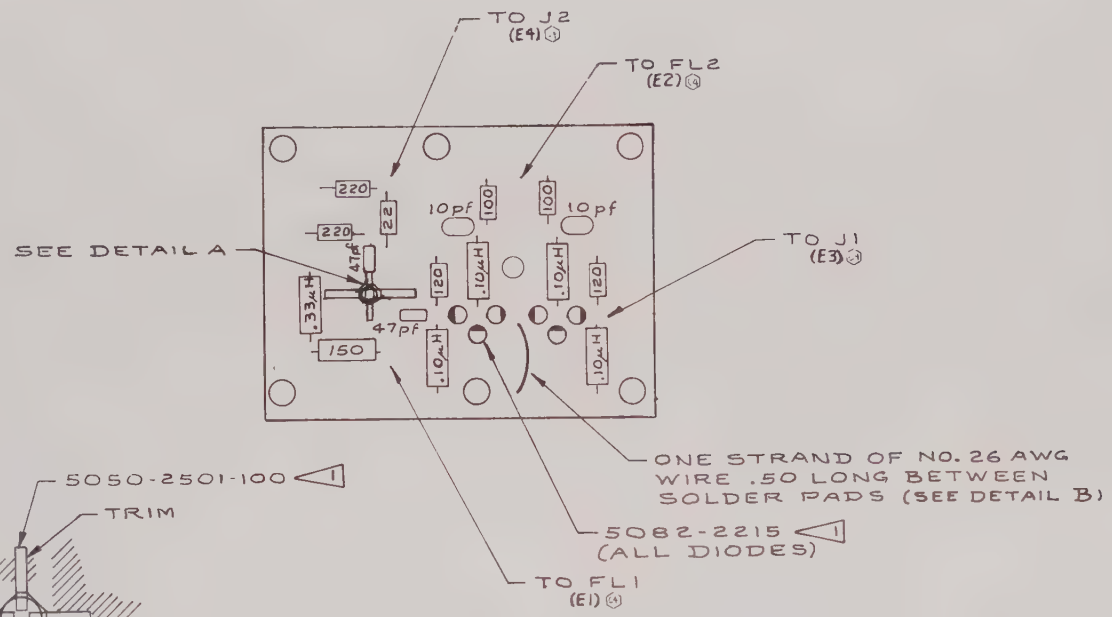

DETAIL A
SCALE - NONE

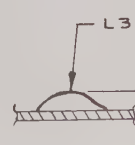

DETAIL B
(SIDE VIEW)
NO SCALE

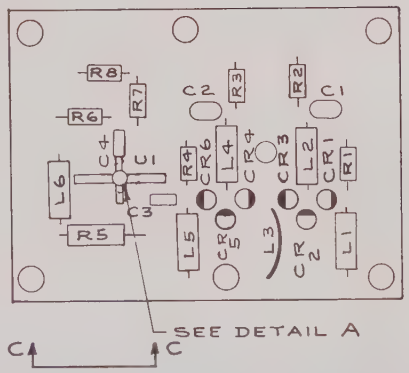

SOLDER ONE END OF R5 ONLY

VIEW C C
SCALE NONE

NOTES:

1. COMPONENTS TO BE ASSEMBLED WITH A MINIMAL AMOUNT OF APPLIED HEAT.
2. WARNING: THIS ASSY IS STATIC SENSITIVE AND SHOULD BE ASSEMBLED IN A STATIC-FREE WORK STATION.

DASH NO	REF DES SERIES	NEXT ASSY	MODEL
	39000	7005-4940-900	RD-301

APPLICATION

UNLESS OTHERWISE SPECIFIED ALL DIMENSIONS APPLY AFTER FINISH
TOLERANCES
DECIMALS ±
FRACTIONS ±
ANGLES ±
SURFACE FINISH √
REMOVE ALL BURRS
DO NOT SCALE THIS DRAWING

MATERIAL ~

FINISH ~

-IFR INC- 10200 West York Street Wichita, Kansas 67215

DRAWN A. OSBURN DATE 10-10 84
CHECKED WB DATE 10-12-84
APPROVED Bill Young DATE 10-18-84

TITLE PC BOARD ASSY. MAIN DIODE SWITCH 49-300

SIZE C DWG NO 7010-4930-000 REV C5

SCALE 2:1 CODE IDENT 51190 WEIGHT SHEET 1 OF 1

DATE	REV	CHANGE		APVD
12-19-80	B-3	INC RC, REDRAWN, 9315	JM	VLH
1-12-87	C	INC ECN 9381	AO	VLH
11-12-87	C-1	INC RC10497	AO	VLH

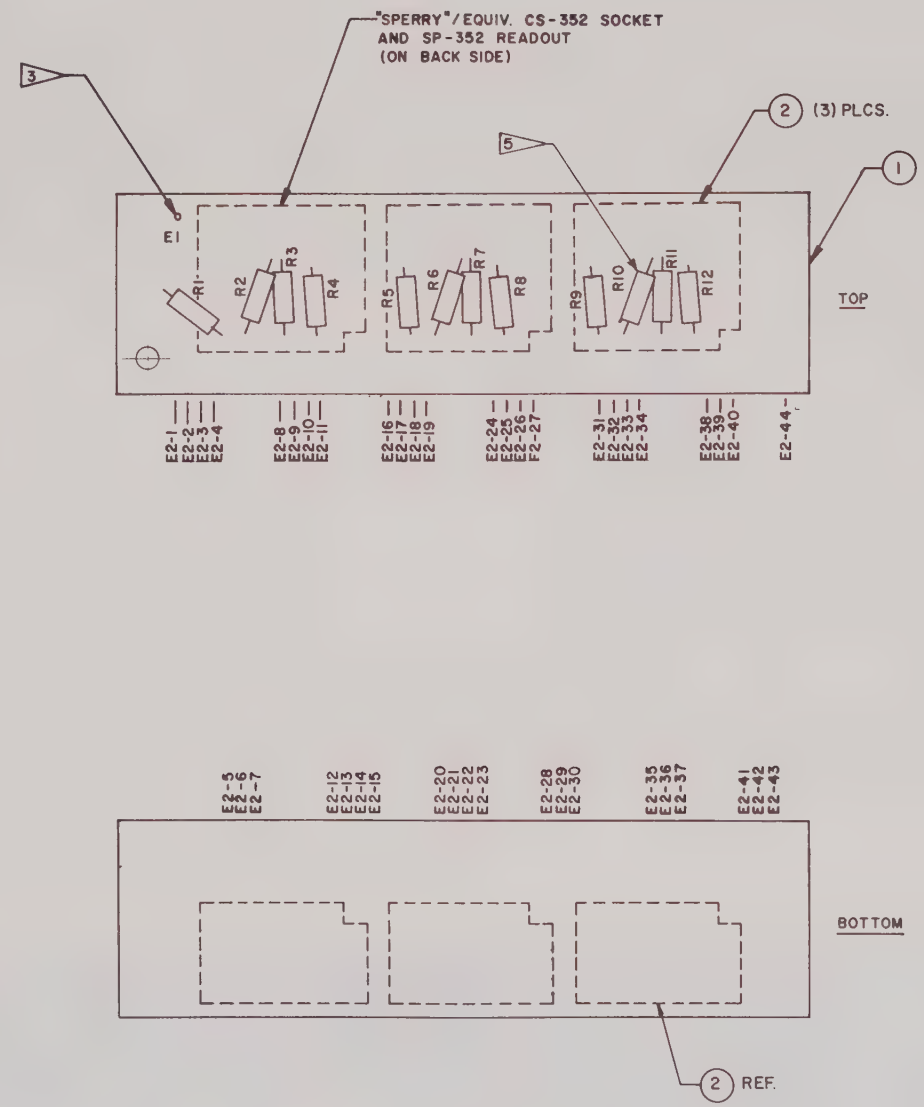

NOTES:

1. ALL RESISTORS ARE 1/4 W 10% UNLESS OTHERWISE SPECIFIED.
2. LEADS MAY EXTEND ONLY .01-.02 BEYOND BOTTOM OF BOARD AFTER SOLDERING.
3. 200V FROM P14001-18 (E26001 FOR RD-301)
4. REF. DESIGNATOR SERIES FOR THIS PC BOARD ASS'Y FOR RD-301 IS 26000 (I.E. R1 IS R26001)

(C-1) 5 — CLEARANCE BETWEEN RESISTOR BODY AND SOCKET LEADS SHOULD BE NO LESS THAN 0.10"

TOLERANCES: (UNLESS OTHERWISE SPECIFIED)

ALL DIMENSIONS APPLY AFTER FINISH

TOLERANCES
DECIMALS .XX ± .XXX ±
ANGLES ±
SURFACE FINISH √
REMOVE ALL BURRS

MATERIAL

FINISH

IFR SYSTEMS INC
10200 West York St., Wichita, Kansas 67215

DRAWN JNV	DATE 1/31/77	TITLE COUNTER DISPLAY PC BOARD ASSEMBLY RD-300 25-178
CHECKED RKK	DATE 2/8/77	
APPROVED ML	DATE 2/10/77	SIZE C — DWG NO 7010-2517-800 — REV C-1
		SCALE OR AS NOTED 2:1 — DO NOT SCALE THIS DRAWING — FSCM CODE 51180 — SHEET 1 OF 1

DATE	REV	CHANGE	APP'D
	B	INC. RP. ECN # 2245	
	B	INC ECN 2787	
	C	INC ECN #3410	
	D	UPDATED REF.	
	E	INC RC 8170 SJA	
	F	INC	
	E.1	INC ECN 10475	

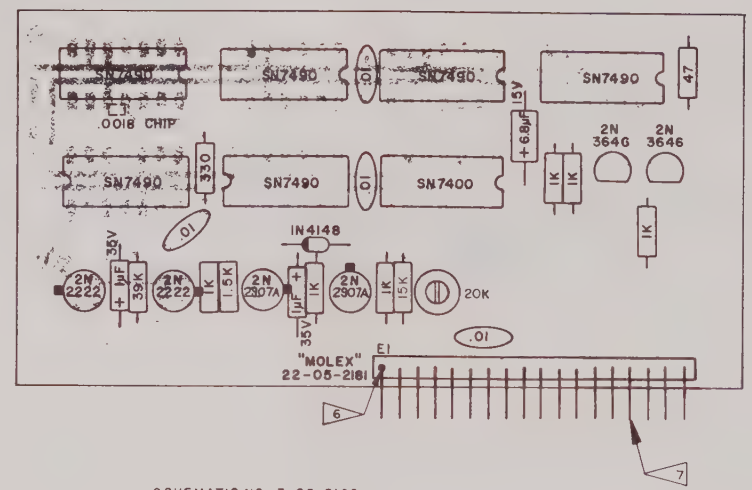

SCHEMATIC NO. 3-25-0102

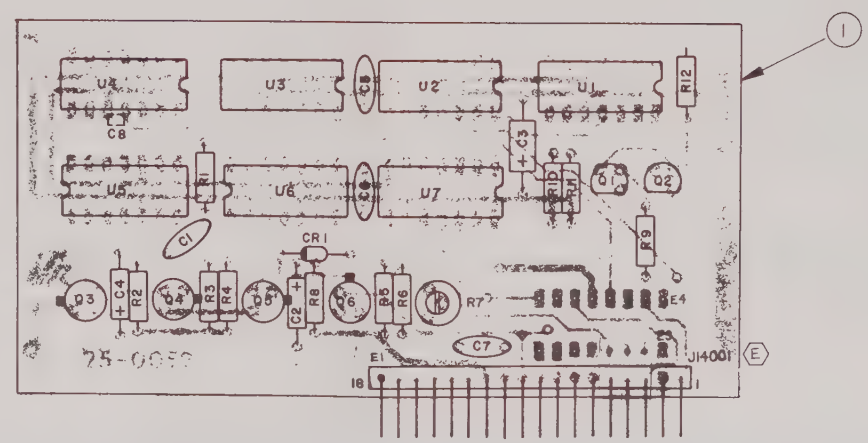

NOTES:

1. ALL RESISTORS ARE 1/4 W., 10% TOLERANCE EXCEPT AS NOTED.
2. ALL CAPACITOR VALUES ARE IN μF EXCEPT AS NOTED.
3. COMPONENT LEADS MAY EXTEND .04 TO .06 BEYOND BOTTOM OF BOARD AFTER SOLDERING.
4. MAXIMUM HEIGHT OF COMPONENTS TO BE .35 FROM COMPONENT SIDE OF BOARD.
5. PLACE CHIP CAPACITORS ON BACK SIDE OF BOARD.
6. 200V TO COUNTER DISPLAY BD. VIA AWG#26 ORG/WHT WIRE SOLDERED TO THE BOTTOM SIDE OF PIN 18, (E1)
7. REMOVE PIN 4 FOR KEYING PURPOSES (E)
8. REFERENCE DESIGNATOR SERIES FOR THIS PC BOARD ASS'Y IS 31001 (I.E. R1 IS R31001) (E)

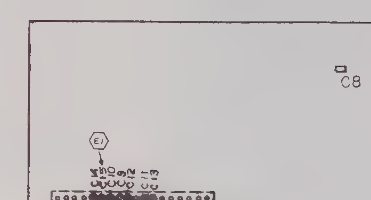

ITEM	REQ'D	PART NO.	DESCRIPTION
1	1	25-0180	PC BOARD ASS'Y

LIST OF MATERIALS

NEXT ASSY	QTY	MODEL
25-0177	1	RD 300

APPLICATION

TOLERANCES UNLESS OTHERWISE SPECIFIED ALL DIMENSIONS APPLY AFTER FINISH DECIMALS: .XX = ± .010 .XXX = ± .005 ANGLES ± 1/2° FRACTIONS ± 1/64 SURFACE ROUGHNESS 125 REMOVE ALL BURRS

MATERIAL —
FINISH —

DRAWN JNV 1-29-77
CHECKED RKK 2/3/77
APPROVED 2/77

- IFR INC -
WICHITA, KANSAS

TITLE COUNTER GATING PC BOARD ASSEMBLY DETAILS RD-300 25-190

SIZE C PART NUMBER 7010-2518-000 REV. E1
SCALE 2X WEIGHT — SHEET 1 OF 1

DATE	REV	CHANGE	APVD
4/11/85	A	PROD. RELEASE ECN 6490	
8/8/85	A-1	INC ECN 7240 AO	DS
9/26/85	A-2	INC RC 7565 MKM	VLH
1/13/86	A-3	INC RC 8170 SJA	

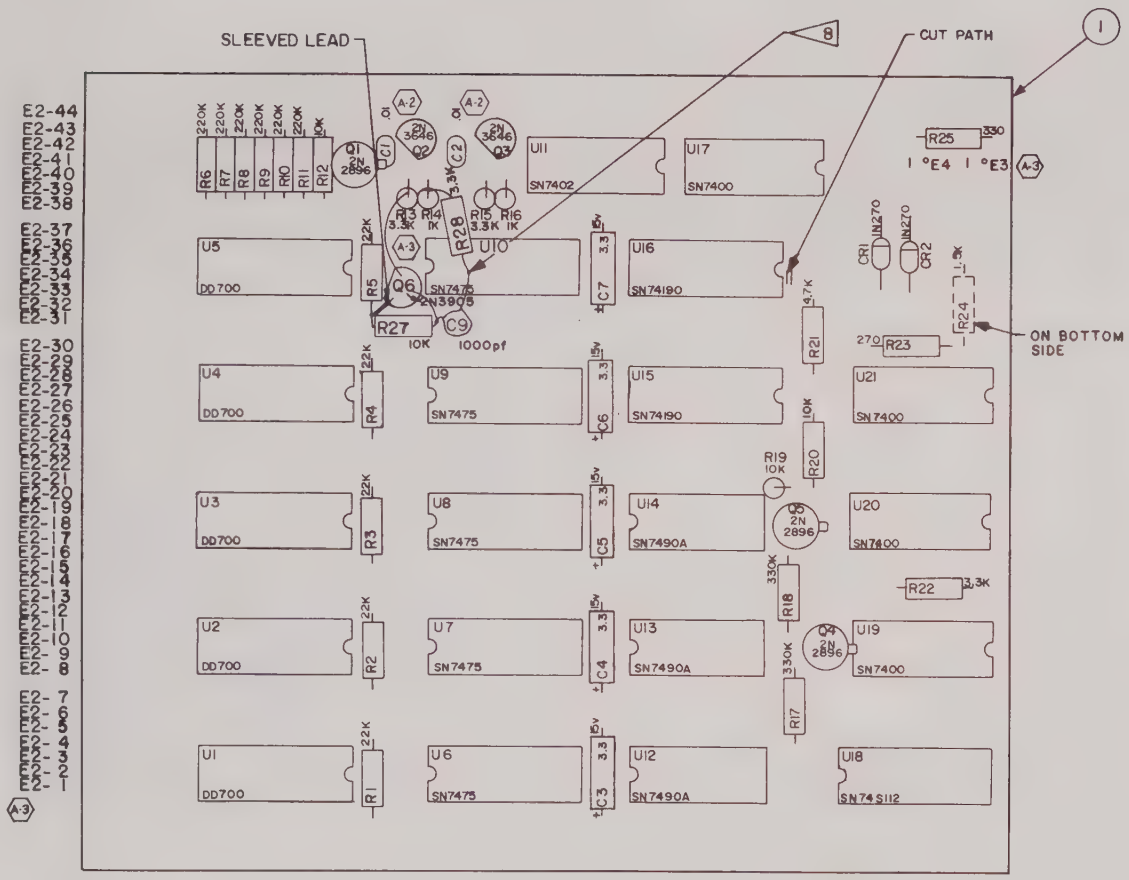

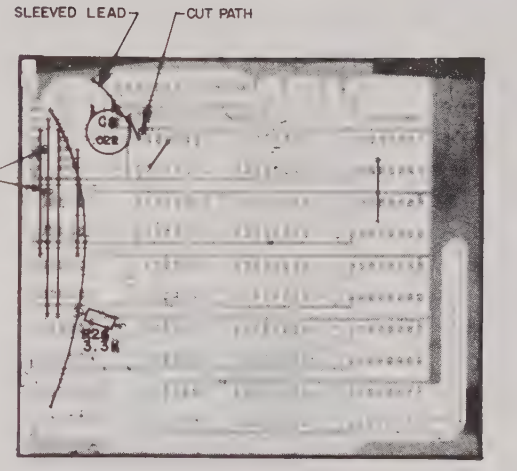

JUMPER WIRE LOCATION
SOLDER SIDE - 26ga SLEEVED BUSS 7
(FULL SCALE)

NOTE

1. ALL RESISTORS ARE 1/4w, 5% TOL, UNLESS OTHERWISE SPECIFIED.
2. ALL CAPACITORS ARE μf IN VALUE UNLESS OTHERWISE SPECIFIED.
3. LEADS TO EXTEND .040 - .060 BEYOND BTM OF BD AFTER SOLDERING.
4. MAX HT OF COMPONENTS TO BE .35 FROM COMPONENT SIDE OF BD, EXCEPT C8 (.022), TO BE PLACED VERTICALLY & AS CLOSE TO THE BD AS POSSIBLE.
5. PLACE JUMPERS PER LOCATION DETAIL ABOVE & CUT PATHS WHERE SHOWN.
6. ALL COMPONENTS ARE OF REF. DES. SERIES 21XXX. (i.e. C2=C21002, R20=R21020, etc.)

7 > 6011-0018-001 SLEEVING, 1050-0000-075 BUSS WIRE.

8 > MID-AIR CONNECTION A-3

UNLESS OTHERWISE SPECIFIED
ALL DIMENSIONS APPLY AFTER FINISH
TOLERANCES
DECIMALS .xx ± .01 .xxx ± .005
FRACTIONS ±
ANGLES ±
SURFACE FINISH
REMOVE ALL BURRS
AND SHARP EDGES TYPE

MATERIAL

FINISH

DASH NO	REF DES SERIES	NEXT ASSY	MODEL
-600	21000	7005-4940-400	RD 301

APPLICATION

-IFR INC- 10800 West York Street Wichita, Kansas 67215

DRAWN	L.A. Meis, Jr.	21 Jan 1985
CHECKED	WB	1-22-85
APPROVED	Greenbank	1-25-85

TITLE: PC BOARD ASSY COUNTER LOGIC RD301 (49-316)

SIZE	DWG NO	REV
C	7010-4931-600	A-3

SCALE 2:1 | CODE IDENT 31182 | WEIGHT | SHEET 1 OF 1

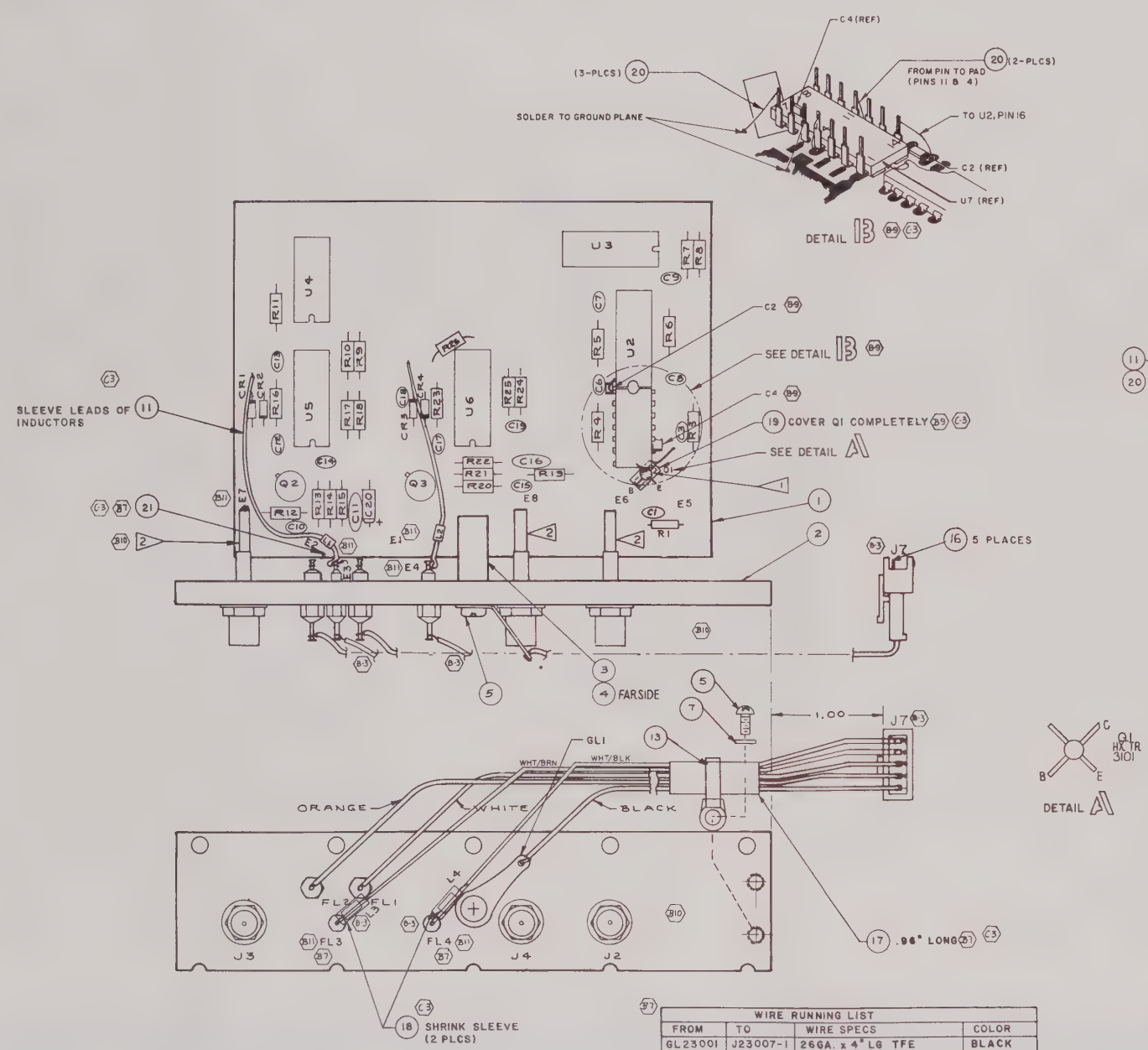

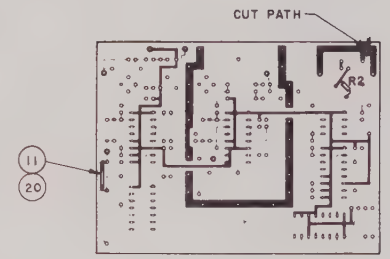

BOTTOM VIEW
SCALE 1:1

DETAIL A

NOTES

1. COMPONENT R2, 15K ON BOTTOM SIDE.
2. TACK SOLDER COAX TO BOARD
3. IDENTIFY J2-J4 ON P.C. BOARD BY USING B-500 WIRE MARKER.
4. ALL REF NUMBERS CARRY AN ASSIGNED DES. SERIES. THIS DWG CARRIES SERIES 23XXX (e.g. R1 IS R23001).
5. LAST REF NUMBER USED: C20, FL4, J7, CR4, L4, Q3, R26, U7, E8.
6. REF NUMBERS NOT USED: J5, J6, U1, C5, J1, C21, C22, C23, C24.
7. LAST ITEM NUMBER USED: 21.
8. ITEM NUMBERS NOT USED: 6, 8, 9, 10, 11, 12, 14, 15.

WIRE RUNNING LIST

FROM	TO	WIRE SPECS	COLOR
GL23001	J23007-1	26GA. x 4" LG TFE	BLACK
FL23002	J23007-2	26 GA. x 5 7/16" LG TFE	ORN
FL23001	J23007-3	26 GA. x 5" LG TFE	WHT
FL23003	J23007-4	26 GA. x 5 7/16" LG TFE	WHT/BRN
FL23004	J23007-5	26 GA. x 4 9/16" LG TFE	WHT/BLK

DATE	REV	CHANGE	APVD
—	A	FORMAL DRAWING	—
8/4/84	B	REVISED & REDRAWN	
10/4/84	B-1	PRODUCTION RELEASE: ECN 6459	
3/11/85	B-2	INC RC 6727 MTH	VH
3-25 85	B-3	INC ECN #6820 RW	
4-3 85	B-4	INC RC 6848	
5-2 85	B-5	INC ECN 6934 RW	SLR
6/26/85	B-6	INC RC 7076 MTH	VLH
9-23 85	B-7	INC RC 7694 SLR	VLH
10-16 85	B-8	INC RC 7585 JS	VLH
11-8-85	B-9	INC ECN 7922 OA	VLH
11-27 85	B-10	INC ECN 8052 JS	
1/14/86	B-11	INC RC 8097 DAH	JS
2-6 86	C	INC ECN 7631 JS	VLH
1-27 86	C-1	INC ADDENDUM 7922 VLH	SLR
1-29 87	C-2	INC ECN 8052 ADDEN "CA:PS"	VLH
8-2 87	C-3	INC RC 9615, UPDATED DWG AO	VLH
8-20 87	C-4	INC ECN 10168 AO	VLH

DASH NO	REF DES SERIES	NEXT ASSY	MODEL
-500	23000	7003-4940-000	RD 301

APPLICATION

-IFR INC-

DRAWN OSBURN 8-7-84
CHECKED 10-1-84
APPROVED 10-1-84

TITLE PC BOARD ASSY PRESCALER 49-305

SIZE D DWG NO. 7010-4930-500 C-5

SCALE 2:1 CODE IDENT 51180 WEIGHT ~ SHEET 1 OF 1

DATE	REV	CHANGE	APVD
1/15/85	A	PRODUCTION RELEASE ECN 6490	VH
3/25/85	A	REDRAWN NO CHANGE	VLH
8-2 85	A-1	INC RC 6825 RW	
8-13 85	A-2	INC RC 7508 MHM	VLH
9-23 85	A-3	INC RC 7701 SLR	VLH
11/18/85	A-4	INC RC 8097 & RC 8220 DAH	JS
2-19 87	A-5	INC ECN 9450 AO	VLH
3-18 87	A-6	INC ECN 9616 AO	VLH

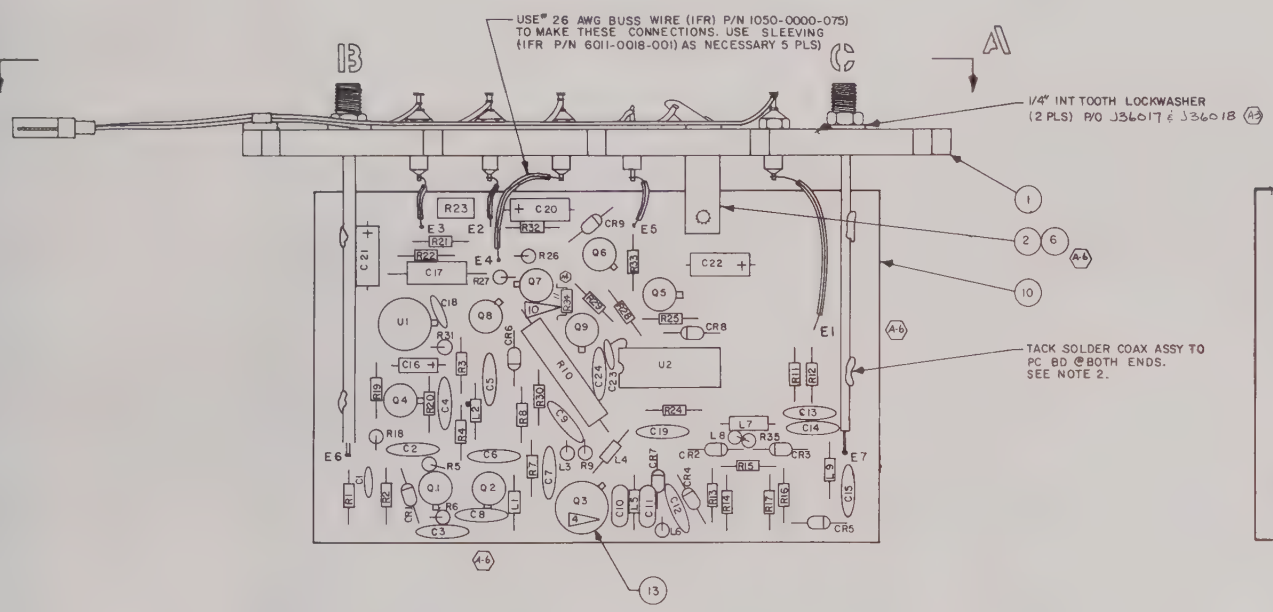

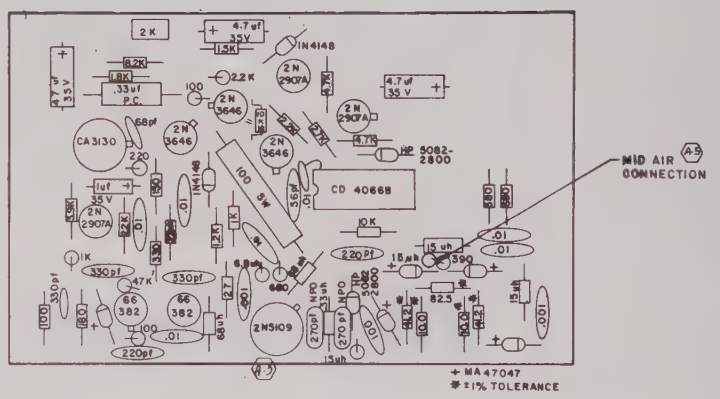

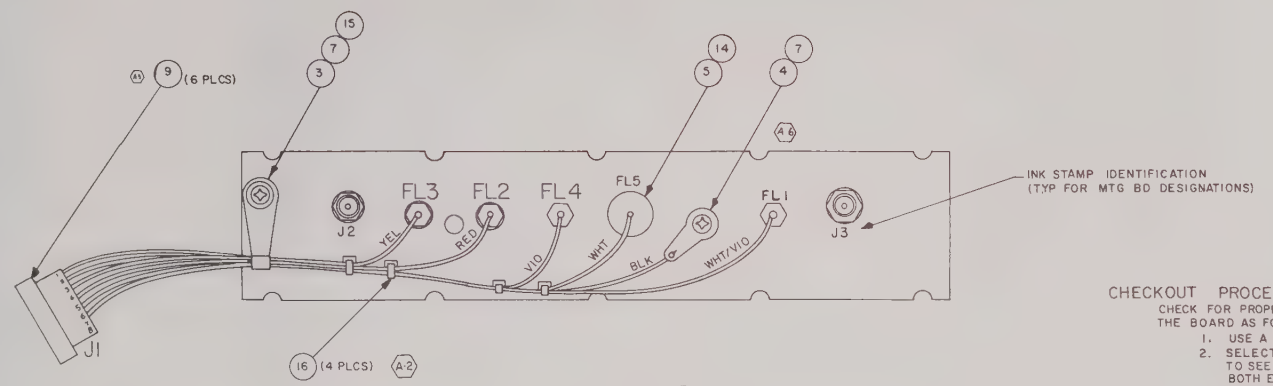

VIEW A-A

WIRING LIST				
FROM	TO	COLOR	SIZE	LG
J1-1	GND LUG	BLACK	26	3 1/2
J1-2	FL-4	VIOLET	26	4 1/2
J1-3	FL-3	YELLOW	26	3 1/2
J1-4	FL-2	RED	26	4
J1-5	,	WHITE	26	5
J1-6	FL-1	WHITE/VIO	26	6
J1-7	NC	——	—	—
J1-8	NC	——	—	—

NOTES:

1. REFER TO ASSY PROCEDURE N°1-34-0100-2 FOR PROPER RIGID COAX ASSY INSTRUCTIONS. INSPECT PER CHECKOUT PROCEDURE LISTED ELSEWHERE ON THIS DWG.
2. ATTACH RIGID COAX ASSY's TO PC BD AS FOLLOWS:
   a. LIGHTLY SAND OUTER JACKET OF COAX w/ 400 GRIT SANDPAPER TO REMOVE OXIDATION & OTHER CONTAMINATES
   b. SOLDER COAX JACKET TO P.C. BOARD USING NO MORE THAN ABOUT A 40w SOLDERING IRON & HEAT COAX FOR AS SHORT A PERIOD OF TIME AS POSSIBLE. LIQUID FLUX MAY BE USED IF NECESSARY DO NOT USE SOLDERING PASTE).
3. DELETED
4. ANNOTATED PART TO HAVE HEAT SINK (ITEM 13).
5. REF DESIGNATOR SERIES FOR COMPONENTS LISTED ON THIS DWG IS 36XXX. (i.e. R11 = R36011 CR9 = CR36009, etc.)
6. ALL RESISTORS ARE 1/4W, 5% TOL UNLESS OTHERWISE SPECIFIED.
7. ALL CAPACITOR VALUES ARE IN uf UNLESS OTHERWISE SPECIFIED.
8. LEADS TO EXTEND .040-.060 BEYOND BTM OF BD AFTER SOLDERING
9. MAX HT OF COMPONENTS TO BE .375 FROM COMPONENT SIDE OF BD.
10. CUT PATH THEN ADD R34 10K 1/8W TO PATH.

CHECKOUT PROCEDURE

CHECK FOR PROPER COAX CONTINUITY AFTER COMPLETION OF THE BOARD AS FOLLOWS:

1. USE A "MIDLAND" VOM MODEL 23-107 OR SIMILAR.
2. SELECT THE "R x 1" SETTING ON THE METER & CHECK TO SEE THAT THE METER IS PROPERLY ZEROED ON BOTH ENDS OF THE SCALE.
3. PLACE THE + (RED) LEAD ON THE CENTER CONDUCTOR OF THE CONNECTOR & THE COMMON (BLACK) LEAD ON THE COAX CENTER CONDUCTOR WERE IT ENTERS THE PC BD. THIS SHOULD OBTAIN A READING OF Ø Ω w/ BOTH COAX CABLES.
4. PLACE THE + (RED) LEAD ON THE CENTER CONDUCTOR OF THE CONNECTOR & THE COMMON (BLACK) LEAD ON THE LARGE COPPER AREA ON TOP OF THE BD (GND). WITH COAX "B", THIS SHOULD OBTAIN A READING OF 85-115 Ω. WITH COAX "C", THIS SHOULD OBTAIN NO READING AT ALL.

DASH NO	REF DES SERIES	NEXT ASSY	MODEL
-500	36000	7003-4940-000	RD-301 (A1)

APPLICATION

IFR INC — 10200 West York Street, Wichita, Kansas 67215

DRAWN	DATE	TITLE	
R.W. & L.M.	3/25/85	PC BOARD ASSEMBLY IF GEN PWR AMP RD 301	
CHECKED	DATE		
V.L.H	3/25/85		
APPROVED	DATE	SIZE / DWG NO	REV
	3/26/85	D 7010-4931-500	A-6
		SCALE 2:1 / CODE IDENT 81180 / WEIGHT — / SHEET 1 OF 1	

DATE	REV	CHANGE	APVD
8/31/84	B	PROD. RELEASE PER ECN 6490	TE
3/7/85	B-1	INC RC 6746 MKM	MLH
3-29-85	B-2	INC RC 6833 RW	RW
9-18-85	C	INC ECN 6871 MTH	TE
9-20-85	C-1	INC RC 7700 SLR	VLH
11/26/86	C-2	INC RC 8097 DAH	JS
12/16/87	C-3	INC RC 9805 DAH	VLH
10/1/87	C-4	INC ECN 10457 RB	VLH

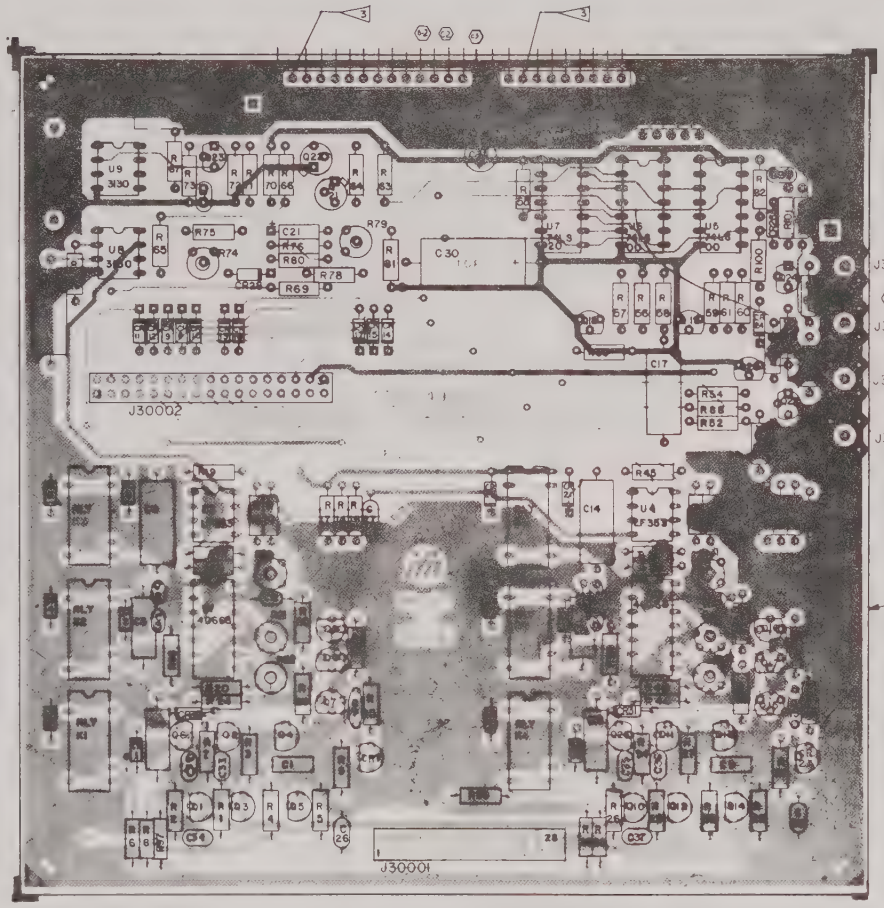

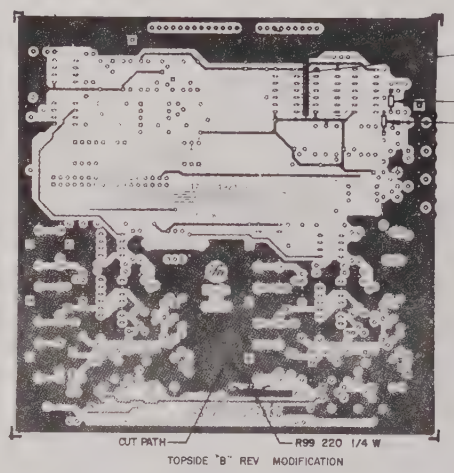

TOPSIDE "B" REV MODIFICATION

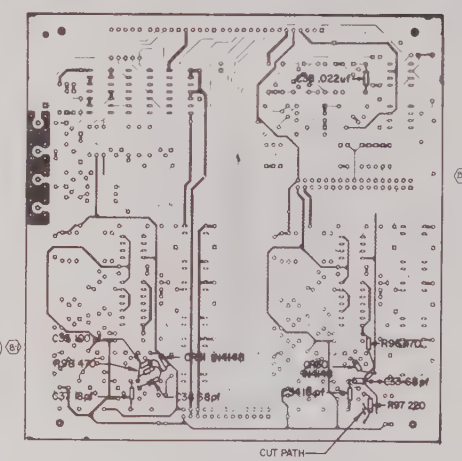

BOTTOMSIDE "B" REV MODIFICATION

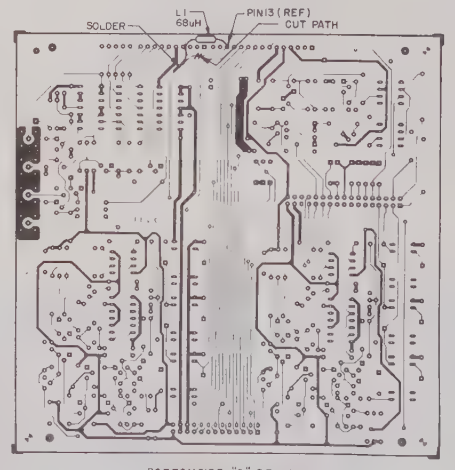

BOTTOMSIDE "C" REV MODIFICATION

NOTES:

1. ALL REF. NOS. CARRY AN ASSIGNED DESIGNATOR SERIES. THIS DRAWING CARRIES SERIES 30000 (eg. R1 IS R30001)
2. ALL COMPONENTS TO BE MOUNTED TOPSIDE.

(2) (5) J3 REMOVE PIN NO.2
J6 REMOVE PIN NO.3

C1	10uf	C12	.1uf	C22	.01uf	C31	47uf	CR1	1N4148	CR11	1N4148	Q21	2N3906	Q11	2N3906	Q31	2N3640	R1	1K	R11	8.2K	R21	2K	R31	1.5K	R41	2K	R51	330	R61	1K	R71	3.3K	R81	6.2K	R91	100
C2	68pf	C13	.1uf	C23	.01uf	C32	47uf	CR2		CR12	1N4148	Q2	2N3905	Q12	2N3903	Q32	2N3640	R2	220	R12	10K	R22	2K	R32	5.2K	R42	2K	R52	560	R62	10K	R72	1K	R82	3.3K	R92	56
C3	1000pf	C14	.1uf	C24	.1uf	C33	68pf	CR3		CR13		Q3	2N3903	Q13	2N3905	Q33	2N3905	R3	15K	R13	1K	R23	10K	R33	10K	R43	10K	R53	1K	R63	1K	R73	470	R83	220	R93	1K
C4	.1uf	C15	68pf	C25	18pf	C34	18pf	CR4		CR14	1N4148	Q4	2N3905	Q14	2N3903	Q34	2N3906	R4	330	R14	330	R24	22K	R34	1K	R44	22K	R54	1K	R64	4.1K	R74	50K	R84	390	R94	1.5K
C5	.1uf	C16	.1uf	C26	.47uf	C35	100pf	CR5		CR15		Q5	2N3903	Q15		Q35	2N3906	R5	220	R15	220	R25	1K	R35	470	R45	1K	R55	33K	R65	22K	R75	499K	R85	4.7	R95	330
C6	10uf	C17	.1uf	C27	68pf	C36	68pf	CR6	1N4148	CR16		Q6	2N3903	Q16		Q36	2N3906	R6	1K	R16	1K	R26	220	R36	330	R46	100	R56	4.7K	R66	4.7K	R76	1.5K	R86	56	R96	470
C7	10uf	C18	.33uf	C28	.10uf	C37	18pf	CR7	1K529K	CR17		Q7	2N3903	Q17				R7	1.5K	R17	1.5K	R27	15K	R37	1K	R47	68	R57	47K	R67	22K			R87	1K	R97	220
C8	10uf	C19	.1uf	C29	.10uf	C38	.022uf	CR8	1N4148	CR18		Q8		Q18	2N3903			R8	330	R18	470	R28	5K	R38	1.5K	R48	330	R58	47K			R78	1.8K	R88	330	R98	470
C9	.1uf	C20	.1uf	C30	100pf	C39	100pf	CR9	1N4148	CR19	1N4148	Q9		Q19	2N3906			R9	470	R19	1K	R29	220	R39	220	R49	220	R59	2K	R69	1K	R79	1K	R89	100	R99	220
C10	.1uf	C21	.33uf	C31	47uf	CR10	1N4148	R30	1N4148	R20	1N4148	Q10	.10	2N3906	Q20	2N3906		R10	5K	R20	180	R30	470	R40	150	R50	330	R60	1K	R70	1K	R80	442K	R90	56	R100	1.2K
								CR31																										R101	1.2K

DASH NO	REF DES SERIES	NEXT ASSY	MODEL
-000	0000	7005-4940-600	RD-301

APPLICATION

UNLESS OTHERWISE SPECIFIED ALL DIMENSIONS APPLY AFTER FINISH
TOLERANCES DECIMALS .xx ± .01 .xxx ± .005 FRACTIONS ± 1/64 ANGLES ± 1° SURFACE FINISH 63 MICRO ALL OVER DO NOT SCALE THIS DRAWING
MATERIAL N/A
FINISH

-IFR INC- 10200 West York Street Wichita, Kansas 67215

DRAWN	T. Eberhart	DATE 12/20/84
CHECKED		DATE 12-20
APPROVED		DATE 12-26-84

TITLE: PCB ASSY RANGE BOARD # 2

SIZE D | DWG NO 7010-4931-000 | REV C4

SCALE 2:1 | CODE IDENT 81180 | WEIGHT | SHEET 1 OF 1

DATE	REV	CHANGE	APVD
10/24/84	A	PRODUCTION RELEASE ECN 6490	VH
1/30/85	B	INC ECN #6589 NEW MKT MTH	VH
8/8/85	B-1	INC RC 6703 MKM	VH
9-4-85	B-2	INC ECN 7503 MKM	VLH
9-24-85	B-3	INC RC 7719 SLR	VLH
5/31/86	B-4	INC RC 8652 RB	VLH
2-11-87	C	INC ECN 9513 AO	VLH
11-20-87	C-1	INC RC 10515 JS	VLH

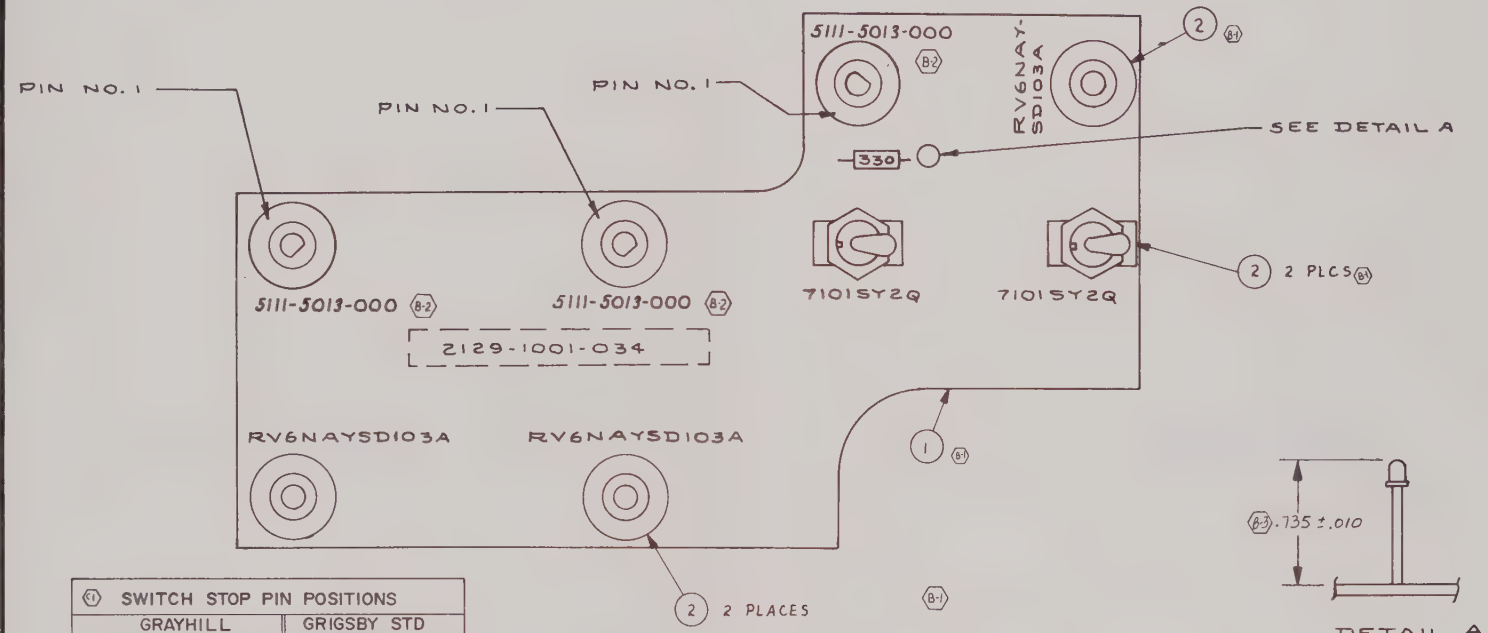

SW №	GRAYHILL SWITCH PIN № 1	GRAYHILL SWITCH PIN № 2	GRIGSBY STD SWITCH PIN № 1	GRIGSBY STD SWITCH PIN № 2
S1	1-12	9-10	2-3	11-12
S3	1-12	4-5	2-3	6-7
S5	1-12	4-5	2-3	6-7

(B-1) SWITCH STOP PIN POSITIONS

DETAIL A

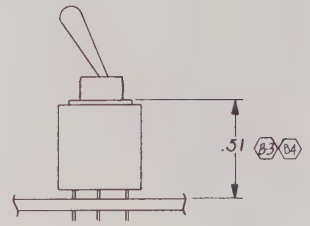

DETAIL B
S2, S4 (B-1)

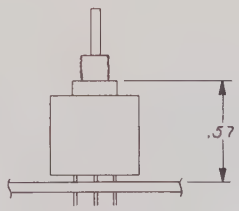

DETAIL D
R2, R3, R4 (B-1)

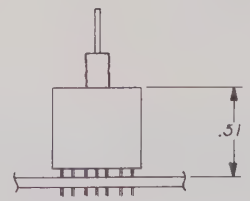

DETAIL C
S1, S3, S5 (B-1)

(B-1) NOTES:
1. JIG IS USED TO BUILD BOARD

DASH NO	REF DES SERIES	NEXT ASSY	MODEL
APPLICATION		10XXX 7005-4940-100	RD301

UNLESS OTHERWISE SPECIFIED ALL DIMENSIONS APPLY AFTER FINISH
TOLERANCES DECIMALS .xx ± .xxx ± FRACTIONS ± ANGLES ± SURFACE FINISH REMOVE ALL BURRS DO NOT SCALE THIS DRAWING
MATERIAL ~
FINISH ~

-IFR INC- 10200 West York Street Wichita, Kansas 67215

DRAWN A. OSBURN	DATE 9-18-84	TITLE PC BOARD ASSY RANGE DISCRETE 49-309	
CHECKED WS	DATE 10-12-84		
APPROVED [signature]	DATE 10-12-84	SIZE C	DWG NO 7010-4930-900 REV C1
		SCALE 2:1	CODE IDENT 51180 WEIGHT ~ SHEET 1 OF 1

DATE	REV	CHANGE	APVD
	A	PRODUCTION RELEASE ECN 8053	VLH
5-15-86	A-1	INC ECN 8521 JS	VLH

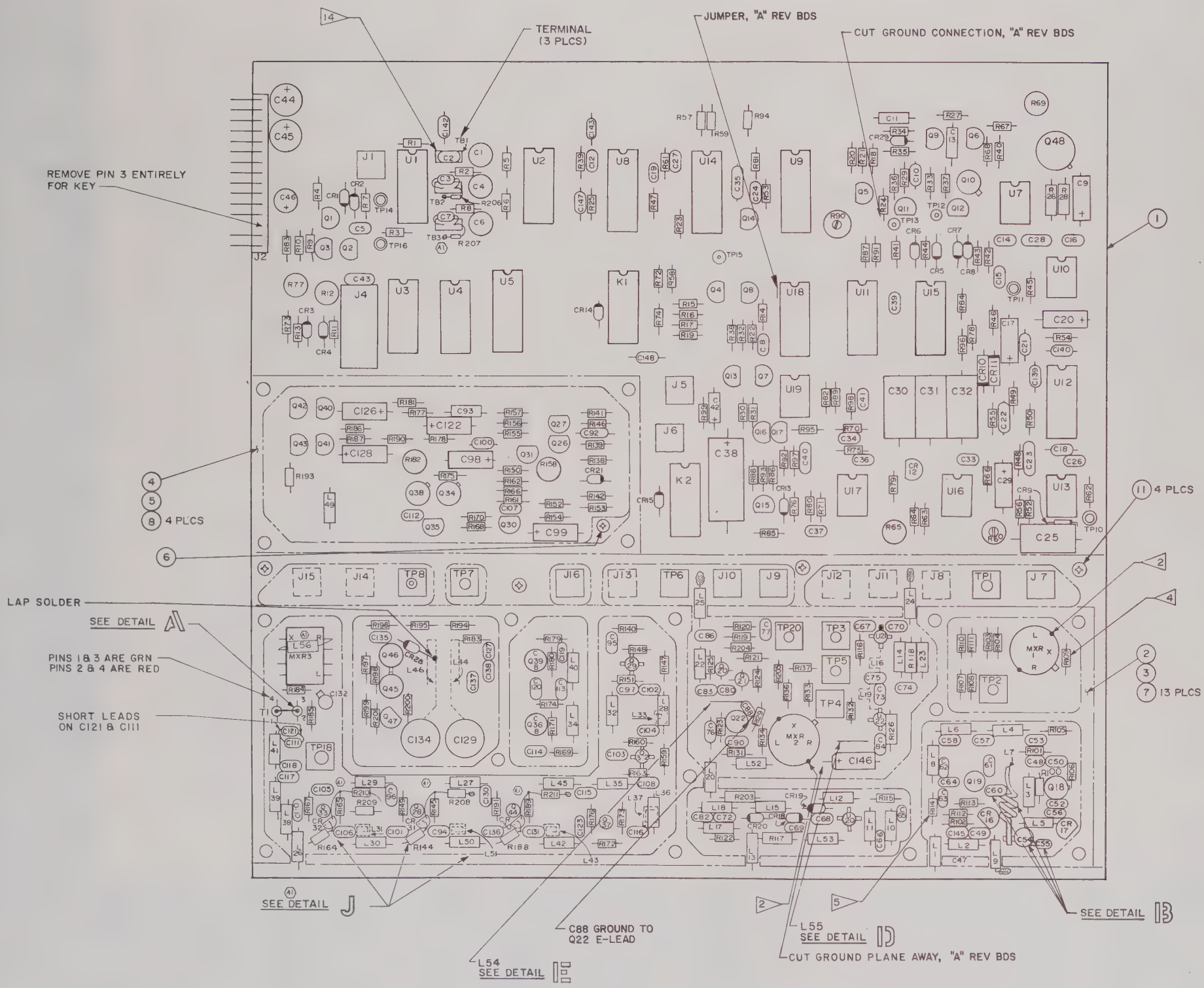

NOTES:

1. ALL REF Nº'S CARRY AN ASSIGNED DESIGNATOR SERIES. THIS DWG CARRIES SERIES 50XXX (e.g., R1 IS R50001).
2. MOUNT MIXER 1 AND 2 FLAT AGAINST P.C. BOARD. TAC SOLDER CAN TO GRND PLANE.
3. REF SCHEMATIC DWG Nº IS 0000-4912-800
4. R109 IS S.A.T. (SELECTED AT TEST) NOMINAL VALUE: 100 ohm, RANGE VALUE: 82-180 ohm.
5. R114 IS S.A.T. (SELECTED AT TEST) NOMINAL VALUE: 150 ohm, RANGE VALUE: 100-180 ohm.
6. LAST REF Nº'S USED: C148, CR32, J16, K2, L56, MXR3, Q48, R211, TP20, U22, T1
7. REF Nº'S NOT USED: C85, C144, J3, L21, L47, Q23, Q24, Q25, R192, TP9, TP17, C79, C81, C91, C124, C125, C133, L48, R51, R127, R128, R130, R135, R143, R202, T2, TP19, U6
8. LAST ITEM Nº USED: 11
9. ITEM Nº'S NOT USED: , 9
10. L7 IS CONSTRUCTED FROM AN 18 GA WIRE 1.8" LG. C60 IS ATTACHED .2" FROM GND PLANE
11. NOT USED
12. REMOVE OXIDE AND EXCESS SOLDER UNDER BLOCKS.
13. DO NOT TOP SOLDER COMPONENT LEADS. SOLDER FROM FAR SIDE ONLY. USE A HEAVY TIP TO FLOW SOLDER THROUGH PLATED HOLES WHICH ARE GROUNDED.
14. C2, C3 & C7 ARE S.A.T. (SELECT AT TEST) COMPONENTS. NOMINAL VALUE: 27 pf
RANGE VALUE FOR: C2 ·····15—100pf
C3 ·····15—56 pf
C7 ·····15—82 pf

SEE SHT 2 FOR DETAILS

DASH NO	REF DES SERIES	NEXT ASSY	MODEL
		7005-4940-600	RD-301

APPLICATION

-IFR INC- 10200 West York Street Wichita Kansas 67215

DRAWN J. SIGLER DATE

CHECKED DATE 5/15/86

APPROVED DATE

TITLE P.C. BD ASS'Y DISCRIMINATOR BD Nº 1 RD301 (49-328)

SIZE D DWG NO 7010-4932-800 REV A-1

SCALE 2:1 CODE IDENT 91180 WEIGHT SHEET 1 OF 2

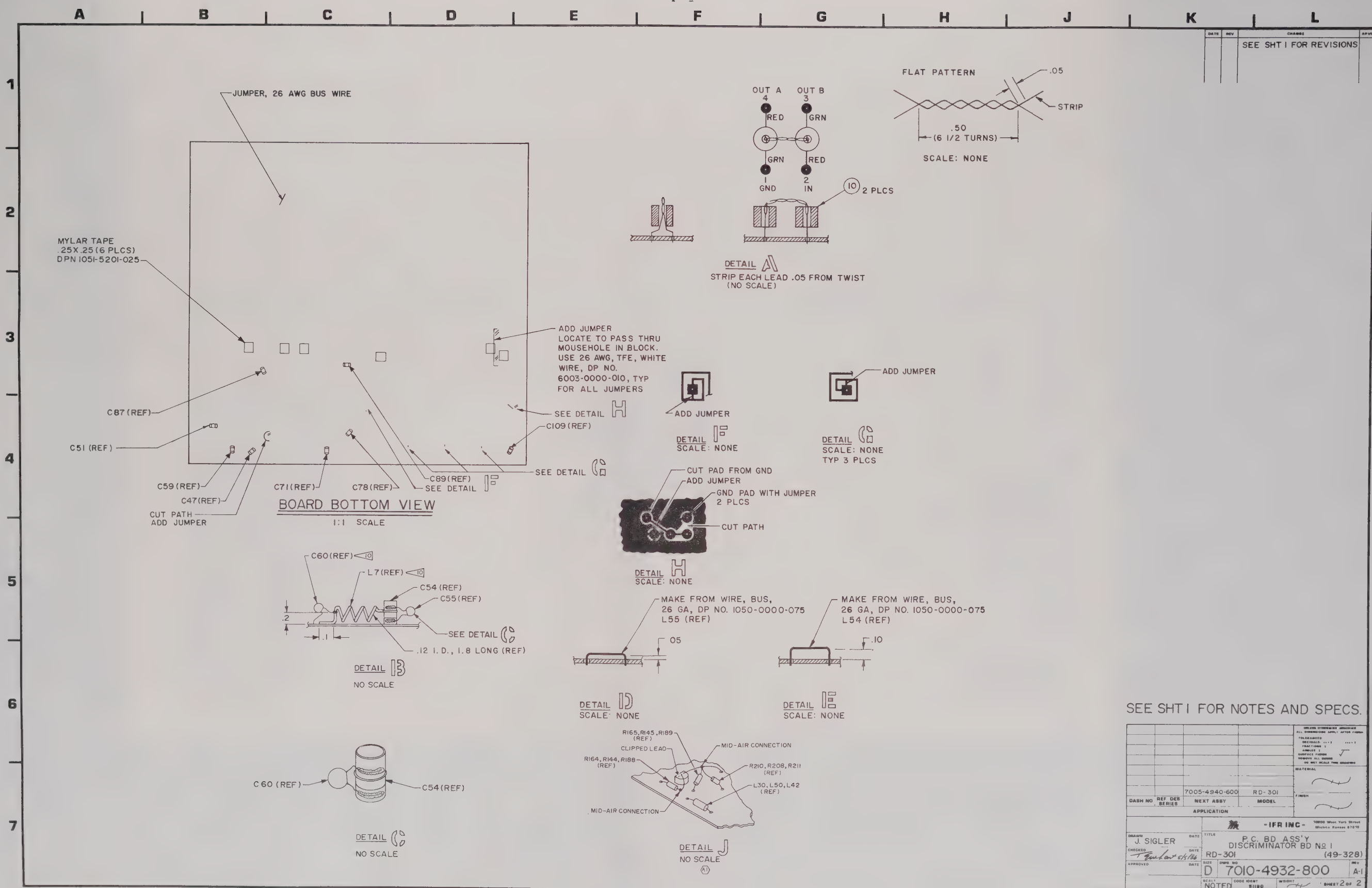

SEE SHT 1 FOR REVISIONS
JUMPER, 26 AWG BUS WIRE
MYLAR TAPE
.25X.25 (6 PLCS)
DPN 1051-5201-025
C87 (REF)
C51 (REF)
C59 (REF)
C47 (REF)
CUT PATH
ADD JUMPER
C71 (REF)
C78 (REF)
C89 (REF)
SEE DETAIL F
SEE DETAIL G
C109 (REF)
SEE DETAIL H
ADD JUMPER
LOCATE TO PASS THRU
MOUSEHOLE IN BLOCK.
USE 26 AWG, TFE, WHITE
WIRE, DP NO.
6003-0000-010, TYP
FOR ALL JUMPERS
BOARD BOTTOM VIEW
1:1 SCALE
OUT A
4
RED
GRN
1
GND
OUT B
3
GRN
RED
2
IN
10
2 PLCS
DETAIL A
STRIP EACH LEAD .05 FROM TWIST
(NO SCALE)
FLAT PATTERN
.05
STRIP
.50
(6 1/2 TURNS)
SCALE: NONE
ADD JUMPER
DETAIL F
SCALE: NONE
ADD JUMPER
DETAIL G
SCALE: NONE
TYP 3 PLCS
CUT PAD FROM GND
ADD JUMPER
GND PAD WITH JUMPER
2 PLCS
CUT PATH
DETAIL H
SCALE: NONE
C60 (REF)
L7 (REF)
C54 (REF)
C55 (REF)
.2
.1
SEE DETAIL G
.12 I.D., 1.8 LONG (REF)
DETAIL B
NO SCALE
MAKE FROM WIRE, BUS,
26 GA, DP NO. 1050-0000-075
L55 (REF)
.05
DETAIL D
SCALE: NONE
MAKE FROM WIRE, BUS,
26 GA, DP NO. 1050-0000-075
L54 (REF)
.10
DETAIL E
SCALE: NONE
C60 (REF)
C54 (REF)
DETAIL G
NO SCALE
R165, R145, R189
(REF)
CLIPPED LEAD
R164, R144, R188
(REF)
MID-AIR CONNECTION
R210, R208, R211
(REF)
L30, L50, L42
(REF)
MID-AIR CONNECTION
DETAIL J
NO SCALE
SEE SHT 1 FOR NOTES AND SPECS.
7005-4940-600
RD-301
DASH NO
REF DES SERIES
NEXT ASSY
MODEL
APPLICATION
-IFR INC-
DRAWN J. SIGLER
TITLE P.C. BD ASS'Y
DISCRIMINATOR BD No 1
RD-301
(49-328)
SIZE D
DWG NO 7010-4932-800
REV A-1
SCALE NOTED
SHEET 2 OF 2

DATE	REV	CHANGE	APVD
9/27/84	B	REVISED & REDRAWN	
10/22/84	B-1	INC ECN 6459 - PROD. REL. NJP	VH
2-7-85	B-2	INC RC 6702 MKM	VLH
9/18/85	B-3	INC RC 7743 VLH	SCR
10-16-85	B4	INC RC 7585 JS	VLH

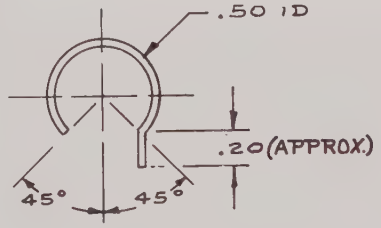

DETAIL "A"
MATL:
DP NO. 1050-0000-071
NO. 18 AWG BUS WIRE
5 REQ

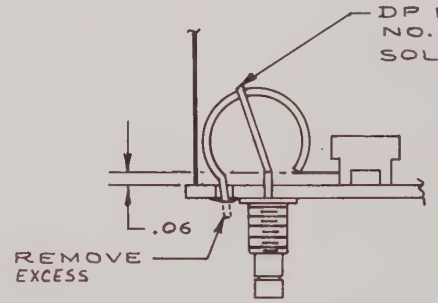

DETAIL "B"
1 PLACE AS SHOWN
1 PLACE OPPOSITE

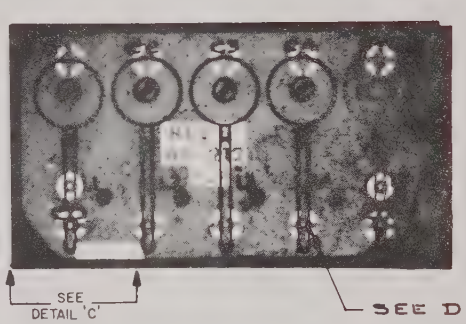

SEE DETAIL "A"

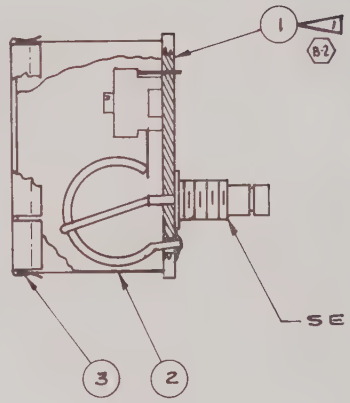

SEE DETAIL "B"

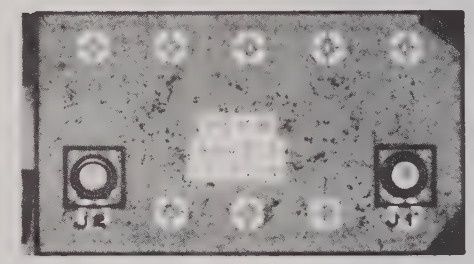

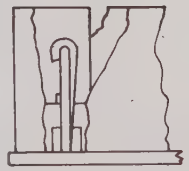

DETAIL 'C'

NOTES:
1. SOLDER ENCLOSURE ITEM (2) TO P.C. BD, ITEM (1) SHOULD BE FLUSH TO P.C. BD. WITH NO GAPS

B3	40000	7005-4940-600	RD-301
DASH NO	REF DES SERIES	NEXT ASSY	MODEL
APPLICATION			

UNLESS OTHERWISE SPECIFIED
ALL DIMENSIONS APPLY AFTER FINISH
TOLERANCES
DECIMALS: ± .010 .xxx ± .005
FRACTIONS ±
ANGLES ±
SURFACE FINISH √
REMOVE ALL BURRS
DO NOT SCALE THIS DRAWING
MATERIAL ~
FINISH ~

-IFR INC- 10800 West York Street Wichita, Kansas 67215

DRAWN P. OSBURN DATE 8-23-84
CHECKED DATE 9-27-84
APPROVED Bill Young DATE 9-27-84

TITLE PC BOARD ASSY 475 MHZ FILTER 49-312
SIZE C DWG NO 7010-4931-200 REV B-4
SCALE 2:1 CODE IDENT 81180 WEIGHT ~ SHEET 1 OF 1

DATE	REV	CHANGE	APVD
4-19 85	B-3	REDRAWN WITH CHG'S INC ECN 6943	TE
5-28 85	B-4	INC RC 7004 MTH	SCR
5/5/85	B-5	INC RC 7649 BA	VLH
10/1/85	B-6	INC RC 7745 VLH	SCR
6-12 86	B-7	INC RC 8681 waw JS	
11 5 86	C	INC RC 9009 waw	DAH

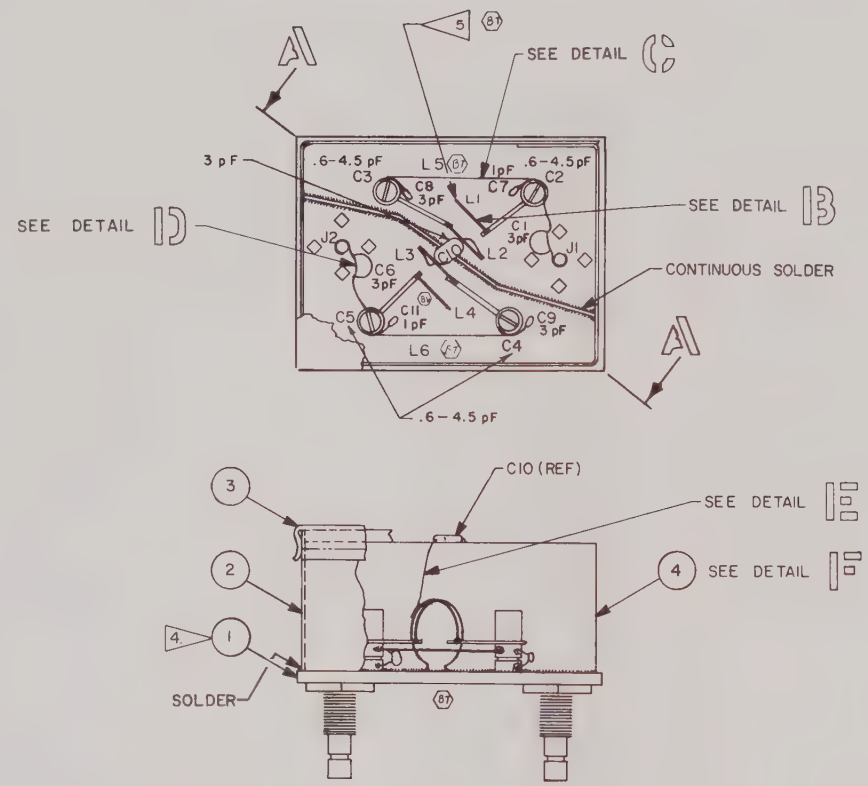

NOTES:

1. ALL REF Nº'S CARRY AN ASSIGNED DESIGNATOR SERIES. THIS DWG CARRIES SERIES 38XXX (e.g., C1 IS C38001).
2. ALL CAPACITANCE IS EXPRESSED IN PICOFARADS, UNLESS OTHERWISE SPECIFIED.
3. LAST REF Nº USED: C11, L6, J2
4. SOLDER (1) TO (2), SHOULD BE FLUSH WITH NO GAPS.
5. (87) L1 MUST BE PARALLEL TO L2, L4 MUST BE PARALLEL TO L3.

SEE SHEET 2 FOR DETAILS & SECTIONS

DASH NO	REF DES SERIES	NEXT ASSY	MODEL
(86)	38000	7005-4940-600	RD-301

APPLICATION

UNLESS OTHERWISE SPECIFIED ALL DIMENSIONS APPLY AFTER FINISH
TOLERANCES
DECIMALS .xx ± .01 .xxx ± .005
FRACTIONS ±
ANGLES ±
SURFACE FINISH √
REMOVE ALL BURRS
DO NOT SCALE THIS DRAWING

MATERIAL

FINISH

HAS BOM

-IFR INC- 10200 West York Street Wichita, Kansas 67215

DRAWN MKM DATE 4-19-85
CHECKED S McElroy DATE 4-22-85
APPROVED Greenbank DATE 4-22-85

TITLE P C BOARD ASS'Y 570-800 MHz FILTER RD-301 (49-311)

SIZE C | DWG NO. 7010-4931-100 | REV C

SCALE 2:1 | CODE IDENT. 51190 | WEIGHT | SHEET 1 OF 2

DATE	REV	CHANGE	APVD
		SEE SHT 1 FOR REV	

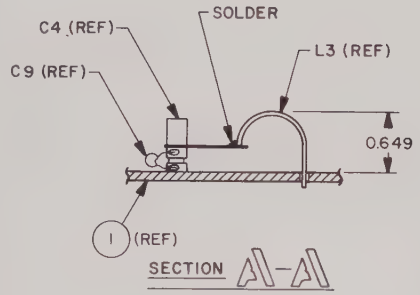

SECTION A1-A1
SCALE: NONE
TYP FOR C3 & C4

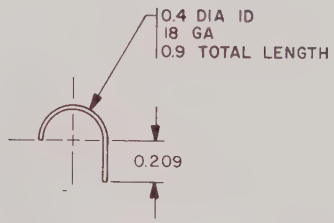

DETAIL B3
SCALE: NONE
TYP FOR L1-L4

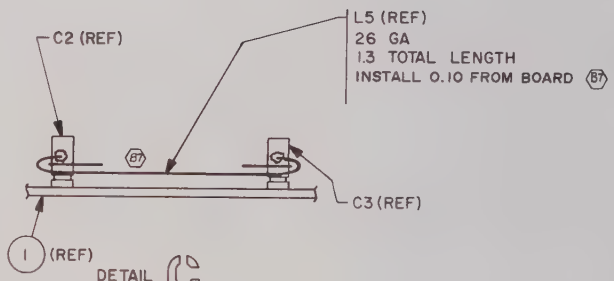

DETAIL C2
SCALE: NONE
TYP FOR L5 & L6

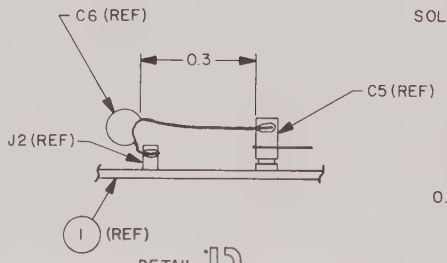

DETAIL D1
SCALE: NONE
TYP FOR C1 & C6

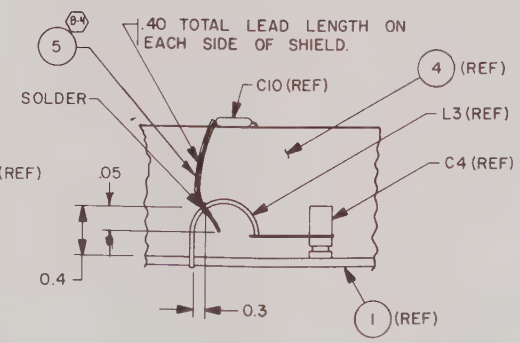

DETAIL B2
SCALE: NONE
TYP FOR L2 & L3

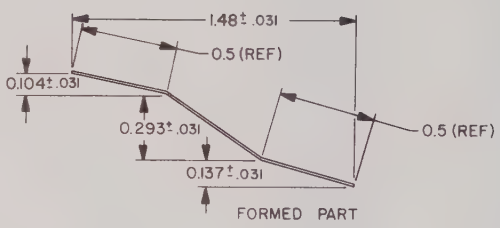

FORMED PART

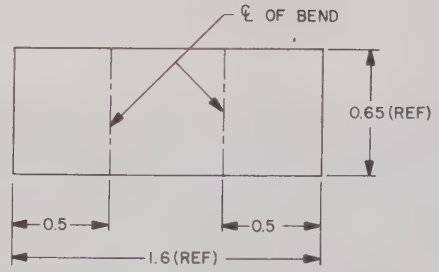

FLAT PATTERN

DETAIL D2
SCALE: 2:1
DETAIL OF R.F. SHIELD
D.P. Nº 2508-4954-400

SEE SHEET 1 FOR NOTES

(B4)	38000	7005-4940-600	RD-301
DASH NO	REF DES SERIES	NEXT ASSY	MODEL
	APPLICATION		

HAS BOM

-IFR INC- 10200 West York Street Wichita, Kansas 67215

DRAWN	MKM 4-19-85
CHECKED	C. McElroy 4/22/85
APPROVED	Greenbank 4/22/85

TITLE: P C BOARD ASS'Y 570-800 MHz FILTER RD-301 (49-311)

SIZE C | DWG NO. 7010-4931-100 | REV C

SCALE NOTED | CODE IDENT 51190 | WEIGHT | SHEET 2 OF 2

UNLESS OTHERWISE SPECIFIED ALL DIMENSIONS APPLY AFTER FINISH
TOLERANCES DECIMALS .xx ±.01 .xxx ±.005 FRACTIONS ± ANGLES ±
SURFACE FINISH
REMOVE ALL BURRS
DO NOT SCALE THIS DRAWING
MATERIAL
FINISH

DATE	REV	CHANGE	APVD
3/1/84	B	Revised per markup	
12/5/84	B	PRODUCTION RELEASE ECN 6490	VH
1/15/85	B-1	INC RC 6878 RW	VH
1/14/86	B-2	INC RC 8097 DAH	JS

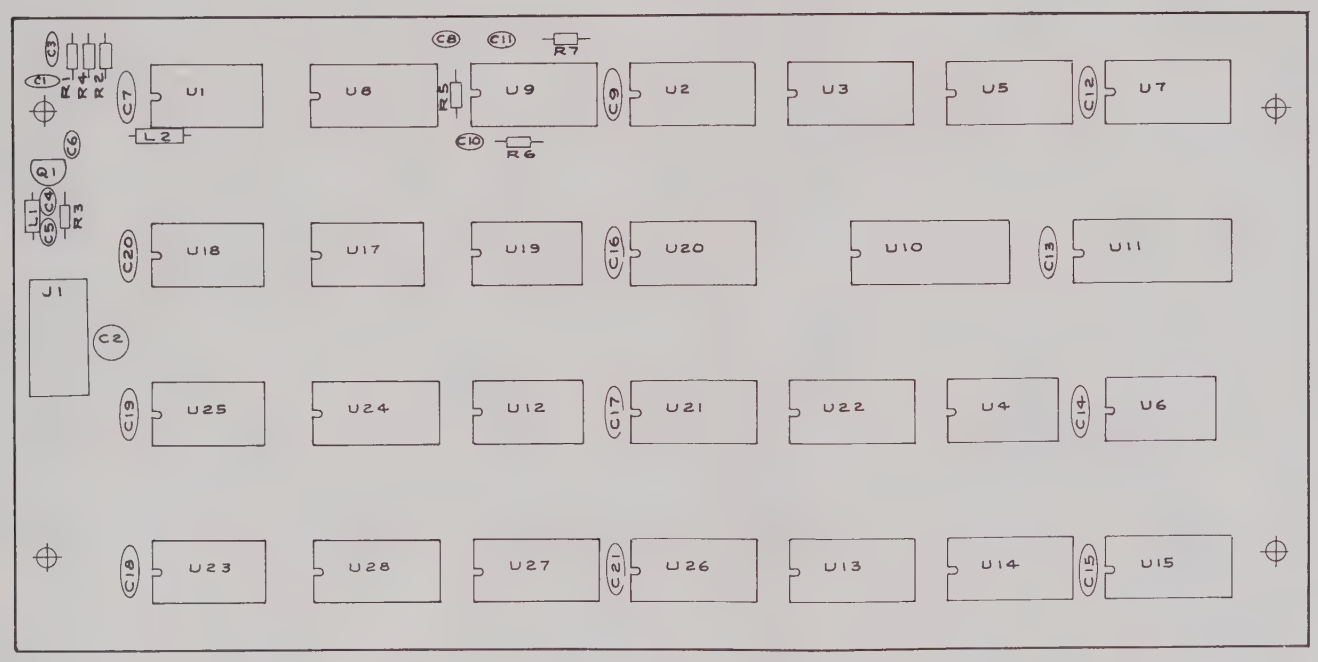

DASH NO	REF DES SERIES	NEXT ASSY	MODEL
-300	35000	7005-4940-600	RD-301

APPLICATION

UNLESS OTHERWISE SPECIFIED ALL DIMENSIONS APPLY AFTER FINISH
TOLERANCES DECIMALS ...± ...± FRACTIONS ± ANGLES ± SURFACE FINISH √ REMOVE ALL BURRS DO NOT SCALE THIS DRAWING
MATERIAL
FINISH

-IFR INC- 10200 West York Street Wichita Kansas 67215

DRAWN A. OSBURN	DATE 7-19-84	TITLE PC BOARD ASSY DISCRIMINATOR BOARD NO. 2 (49-313)
CHECKED [illegible]	DATE 11-84	
APPROVED [signature]	DATE 12-3-84	SIZE D DWG NO 7010-4931-300 REV B-2
		SCALE 2:1 CODE IDENT 51180 WEIGHT SHEET 1 OF 1

SECTION 6 - SCHEMATICS

6-1 ALPHABETICAL INDEX OF SCHEMATICS

TITLE	DRAWING NO.	PAGE
AGC PC Bd.	0000-4912-700	6-15
Counter Display, Gating & Logic	0000-2510-200 (6 Shts)	6-22 thru 6-27
Detector Buffer Power, Pulse Distrib.	0000-4910-100	6-6
Discriminator #1 PC Bd.	0000-4912-800 (5 Shts)	6-34 thru 6-38
Discriminator #2 PC Bd.	0000-4911-300 (2 Shts)	6-41, 6-42
Filter, 475 MHz	0000-4911-200	6-39
Filter, Bandpass 570-800 MHz	0000-4911-100	6-40
Front Panel	0000-4911-800	6-13
IF and Marker Oscillators	0000-4911-400 (2 Shts)	6-11, 6-12
IF Generator Power Amp	0000-4911-500	6-29
Interconnect Diagram	0000-4912-000 (2 Shts)	6-2, 6-3
Main Diode Switch	0000-4910-000	6-17
Modulation Mode Switch	0000-4911-700	6-16
Power Supply, +170 VDC	0000-4911-900	6-5
Prescaler	0000-4910-500	6-28
Range Digitizer Switch	0000-4910-800	6-10
Range Discrete	0000-4910-900	6-33
Range PC Bd. #1	0000-4910-300 (3 Shts)	6-7, -8, -9
Range PC Bd. #2	0000-4911-000 (3 Shts)	6-30 -31, -32
Rear Panel	0000-4912-200	6-4
RF Mode Switch	0000-4910-700	6-14
VCO #2 Circuit Schematic	0000-4912-400 (3 Shts)	6-18, -19, -20
VCO #2 Interconnect Diagram	0000-4912-900	6-21

DATE	REV	CHANGE	APVD
7/16/85	A	PROD. RELEASE: ECN 6490	JC
10/4/85	B	INC RC 7136 DAH	JS
10/14/85	C	INC RC 7797 JS	VLH
12-9-85	D	INC ECN 8052 & 8053 JS	VLH
1-7-86	E	INC ECN 8078 WAW	VLH
1/10/86	F	INC RC 8097 DAH	JS
4-8-87	G	INC ECN 10457 RB	VLH

PRESCALER
7010-4930-500
23XXX
J23001
P23001

RELAY (K12001)
REF 7005-4940-300
12XXX
K12001-1
K12001-2

IF GEN
7005-4931-500
36XXX
J36001
P36001

IF OSC
7010-4931-400
33XXX
J33003
P33003

DETECTOR BUFFER
7010-4930-100
17XXX
J17003
P17003

8.25 GHz RF SOURCE
5850-8251-600
42XXX
FL42001
GL42001

MAIN DIODE SW
7005-4940-900
37XXX
GL37001
E37001
FL37002
F37001

MAIN WIRE HARNESS
7007-4980-000

3 2 4 1 5 TB49001
8 6 7 5 10
P11002
J11002

P10017
J10017
FRONT PANEL
7005-4940-100
10XXX

REAR PANEL
7005-4940-200
11XXX

P47002
J47002
VCO NO 2 MECH ASS'Y
7005-4942-400
47XXX

P50002
J50002
DISCRIMINATOR BD#1
7010-4932-800
50XXX

J50004
P50004
6045-4983-700

P35001
J35001
DISCRIMINATOR BD#2
7010-4931-300
35XXX

P30003
J30003
P30006
J30006
P30002
J30002
6042-4981-200
RANGE BD#2
7010-4931-000
30XXX

J30001
P30001
6045-4980-200

P22001
J22001
RANGE DISCRETE SW BD
7010-4930-900
22XXX

E19001

J19002
P19002
6045-4981-300

P35001
J35001
RANGE DIGIT SW BD
7010-4930-800
15XXX

RANGE BD#1
7010-4930-300
19XXX

P14001
J14001
DISPLAY COUNTER
7005-4940-400
14XXX

DASH NO	REF DES SERIES	NEXT ASSY	MODEL
-000	4-9XXX	7008-4940-000	RD-301

APPLICATION

NO B.O.M.

-IFR INC- 10200 West York Street Wichita, Kansas 67215

DRAWN L A Weiss, Jr 09 MAR 85
CHECKED
APPROVED Greenbank 4-16-85

TITLE: INTERCONNECT DIAGRAM RD-301 (40-1201)

SIZE D | DWG NO 0000-4912-000 | REV 6

SCALE | CODE IDENT 81180 | WEIGHT | SHEET 1 OF 2

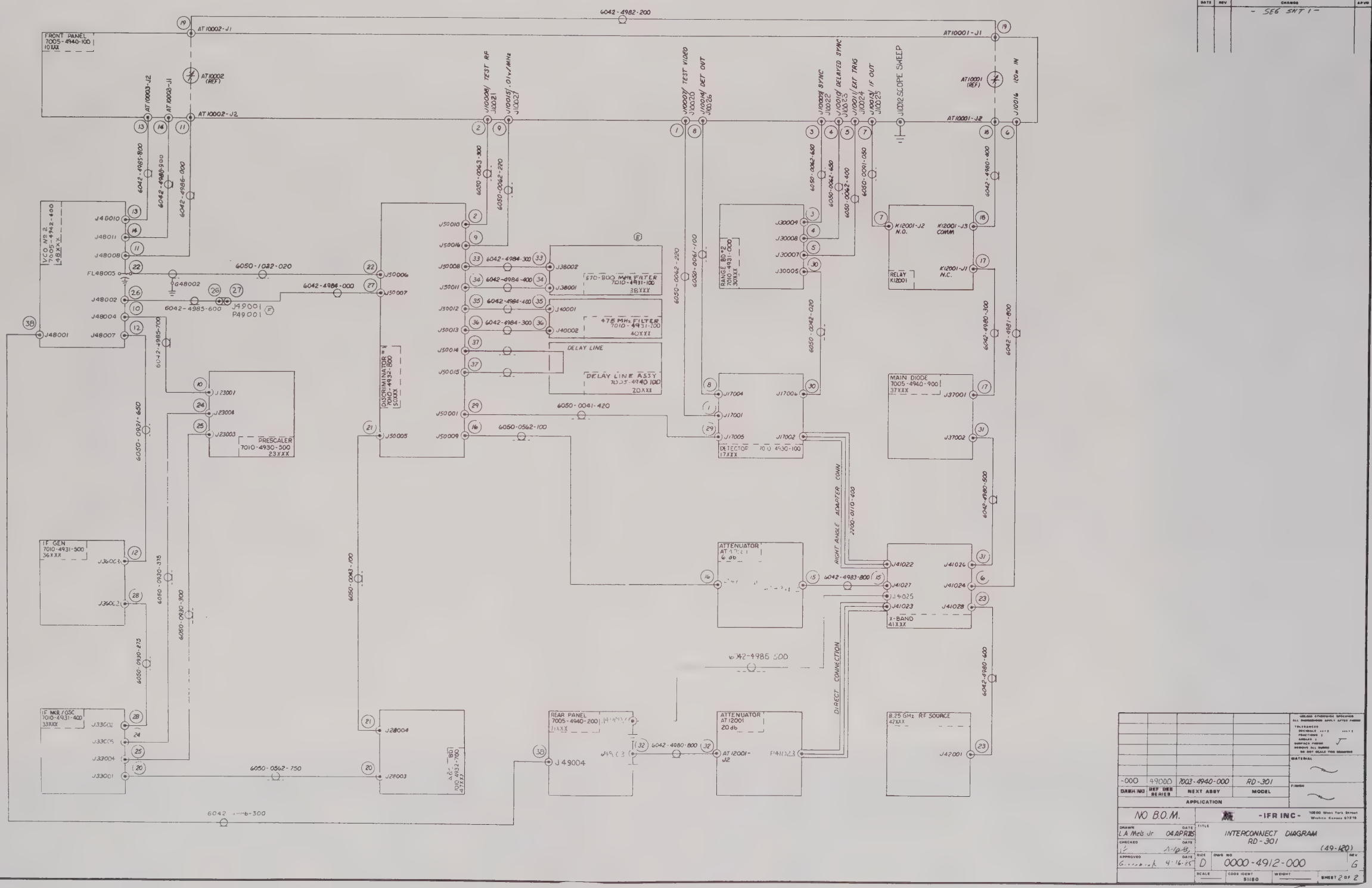

DATE	REV	CHANGE	APVD
		- SEE SHT 1 -	

DASH NO	REF DES SERIES	NEXT ASSY	MODEL
-000	49000	7003-4940-000	RD-301

APPLICATION

NO B.O.M.

-IFR INC- 10800 West York Street Wichita Kansas 67215

DRAWN L.A. Mels Jr DATE 04 APR 85

CHECKED DATE 4-16-85

APPROVED DATE 4-16-85

TITLE INTERCONNECT DIAGRAM RD-301 (49-120)

SIZE D DWG NO 0000-4912-000 REV G

SCALE CODE IDENT 51180 WEIGHT SHEET 2 OF 2

DATE	REV	CHANGE	APPD
3/30/85	A	PRODUCTION RELEASE LAM	
11-2-85	B	INC RC 7925 AO	
1/6/86	B1	INC RC 8097 LAM	JS
4/14/86	B2	INC ECN 8474 waw	VLH
9-24-86 RL	B3	INC ECN 9008 "CHIPS"	VLH
11-13-86	B4	INC ECN 8891 "CHIPS"	VLH

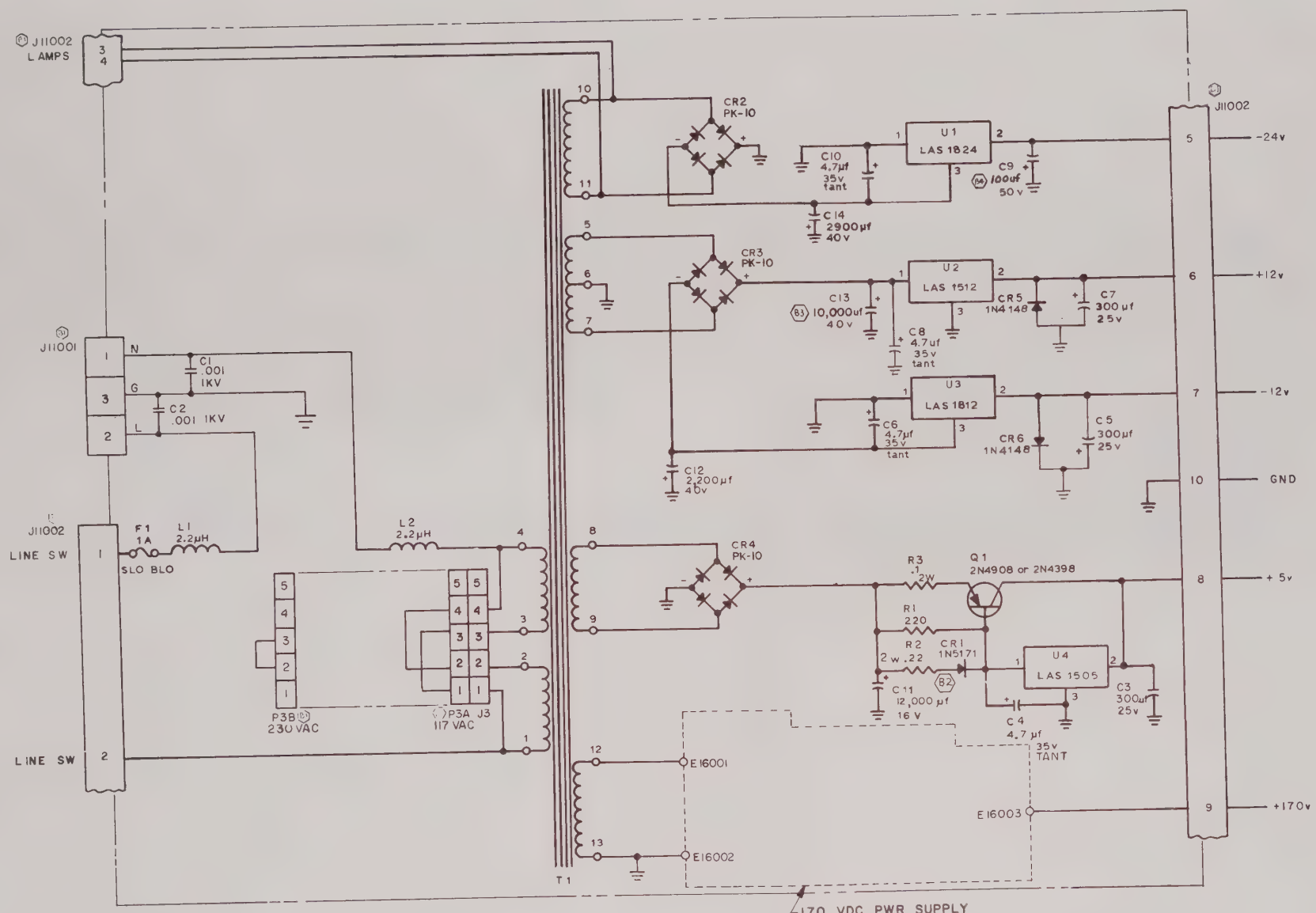

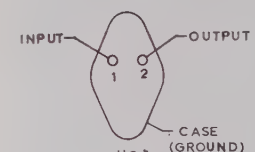

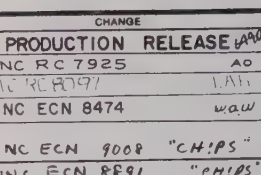

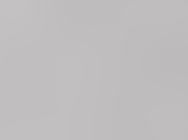

170 VDC PWR SUPPLY
REF SCHEMATIC D.P.Nº
0000-4911-900
REF DES SERIES (16000)

STANDARDS:
(UNLESS OTHERWISE NOTED)

1. ALL REF. Nº'S CARRY AN ASSIGNED DESIGNATOR SERIES. THIS SCHEMATIC CARRIES SERIES 11XXX (eg., R1 IS R11001).
2. ALL RESISTORS ARE 1/4 W, 5%.
3. ALL RESISTANCE IS EXPRESSED IN OHMS.
4. ALL CAPACITANCE IS EXPRESSED IN MICRO FARADS.
5. ALL INDUCTANCE IS EXPRESSED IN MICRO HENRYS.

NOTES:

1. LAST REF Nº USED:
   - C14
   - CR6
   - L2
   - R3
   - U4
   - Q1
   - T1
   - J1
   - 1

7005-4940-200	RD-301
NEXT ASSY	MODEL

APPLICATION

DRAWN: MKM	DATE: 3/12/85	TITLE: REAR PANEL CIRCUIT SCHEMATIC	
CHECKED:	DATE:		
APPROVED	DATE: 11/15/85		
RELEASED:	DATE:	PART NO: 0000-4912-200	
MODEL: RD-301	SCALE: —	SHEET 1 OF 1	REV 84

DATE	REV	CHANGE	APP'D
1/14/85	A	PRODUCTION RELEASE ECN 6490	TE
11-7 85	B	INC RC7925 AO	VLH
1/10/86	B-1	INC RC 8097 DAH	JS

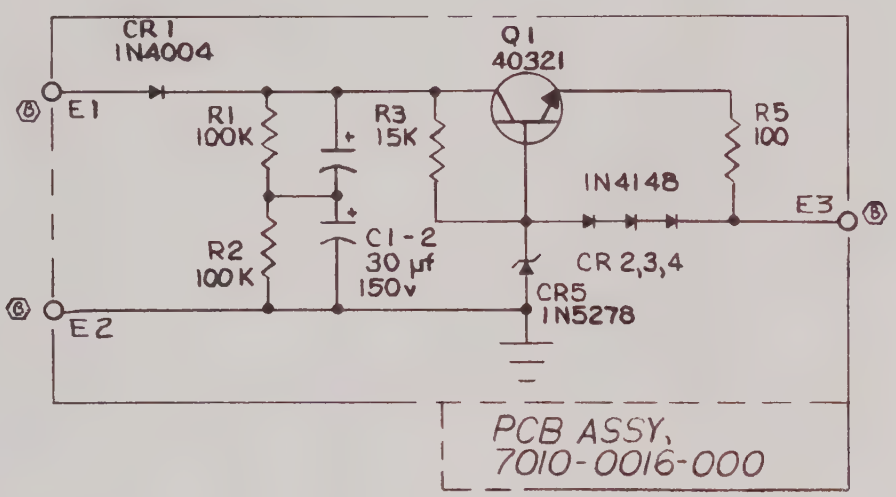

NOTE:

1. RES ARE IN OHMS
2. LAST USED Nº
   R5 C2 CR5 Q1
3. ALL COMPONENTS HAVE REF DES SERIES 16XXX (i.e. R1 = R16001) ON RD 301.
4. REF. DES. NOT USED:
   R4
5. (B1) ALL RESISTORS 1/4W, 5%

RD 301	NAV 750 BR	RD 300	MODEL
1	1	1	QT'Y
7010-0016-000	2-0-0160	2-0-0160	NEXT ASS'Y

APPLICATION

TOLERANCES
UNLESS OTHERWISE SPECIFIED
ALL DIMENSIONS APPLY AFTER FINISH
DECIMALS: .xx = ± .010 .xxx = ± .005
ANGLES: ± 1/2°
FRACTIONS: ± 1/64
SURFACE ROUGHNESS 125 ✓
REMOVE ALL BURRS

MATERIAL ~

FINISH —

DRAWN DATE 03 JAN 1985
CHECKED DATE 1-10-85
APPROVED DATE 1-10-85

-IFR INC-
WICHITA, KANSAS

TITLE
SCHEMATIC
+170 vdc PWR SUPPLY

SIZE A | PART NUMBER 0000-4911-900 | REV B-1

SCALE NONE | WEIGHT — | SHEET 1 OF 1

DATE	REV	CHANGE	APVD
	A	PROTOTYPE RELEASE	
	B	U3. PIN 3 TO GROUND. CHANGE	
4/15/81	B	J6 FROM 5 PIN TO 6 PIN CONN C4 CHANGED TO 33 uF	
11/1/84	B	PRODUCTION RELEASE ECN 6490	VH
4/10/85	C	INC ECN 6752 MTH	MTH
8-20-85	C-1	INC ECN 7520 AO	VLH
11-25-85	C-2	INC ECN 7897 AO	VLH
[illegible]	C-3	[illegible] DAH	JS
11-20-86	C-4	INC ECN 9157 JS	VLH
12-19-86	C-5	INC ECN 9336 JM	VLH

NOTES
1. ALL REF. NOS CARRY ASSIGNED DESIGNATOR SERIES. THIS SCHEMATIC CARRIES SERIES 17XXX. (E.G., R1 IS R17001)
2. ALL RESISTORS ARE 1/4W., 10%.
3. ALL RESISTANCE IS EXPRESSED IN OHMS
4. ALL CAPACITANCE IS EXPRESSE IN MICROFARADS
5. LAST REF. NO. USED
   C16 Q11
   CR4 R47
   J6 U5
6. REF. NO. NOT USED: R18

TEST J1
FROM X-BAND J2
R1 56
R2 100K
R3 33K
R4 3.3K
R5 500 PWR METER
R6 470
-12V (6)
Q1 66382
Q2 66382
R7 470
R8 220
R9 1.5K
R10 47
R11 47
R12 220
R13 1K
R14 18K
R17 1K
CR1 1N4148
C1 .1uF
C2 .1uF
C3 22pF
Q3 2N3905
Q4 VN10KM
C4 33uF 20V TANT
C7 .1uF
C8 .1uF
C10pF
R19 47
C5 .1uF
R20 470
R21 150
R22 470
Q5 VN10KM
C6 15uF 20V TANT
R23 47
R24 1K
R25 150
R45 68
U1 710C
C9 220pF
R46 2K
R26 2.2K
R27 1.5K
R28 27K
C10 1.0uF
U2 74121
74S00
R29 1K
R30 3.9K
Q6 2N2907
Q7 2N2222
CR3 1N4148
R33 4.7M
R32 6.8M
U3 741C
C11 1.0uF
CR4 1N4148
R31 4.7K
R34 1K
C15 470pF
R44 4.32K 1%
U4 3130
J3 POWER MTR
R42 3.3K
R43 3.3K
J5 DISCRIMINATOR BD
J6 RANGE BD
R47 100K SAT. 82K TO 150K
J3 KEY
CR2 LM336C 6.9V
R15 20K METER OFFSET
R16 1K
J4 FRONT PANEL
R35 220
R37 100
C12 6.8uF 35V TANT
R38 27
C14 .10uF
R40 27
Q8 2N3905
Q9 2N3905
R41 150
R39 150
Q10 2N3903
Q11 2N3906
C16 15pF
C13 .1uF
R36 1K

DASH NO	REF DES SERIES	NEXT ASSY	MODEL
-100	17XXX	7010-4930-100	RD-301

APPLICATION

UNLESS OTHERWISE SPECIFIED ALL DIMENSIONS APPLY AFTER FINISH
TOLERANCES DECIMALS .xx ± .xxx ± FRACTIONS ± ANGLES ±
SURFACE FINISH REMOVE ALL BURRS
DO NOT SCALE THIS DRAWING
MATERIAL
FINISH

-IFR INC- 10800 West York Street Wichita, Kansas 67215

DRAWN DATE 8-21-84
CHECKED DATE 10-1-84
APPROVED DATE 11-1-84

TITLE DETECTOR BUFFER, POWER CKT, PULSE DIST. CIRCUIT SCHEMATIC 49-10[illegible]
SIZE D DWG NO. D0000-4910-100 REV C5
SCALE ~ CODE IDENT 51190 WEIGHT ~ SHEET 1 OF 1

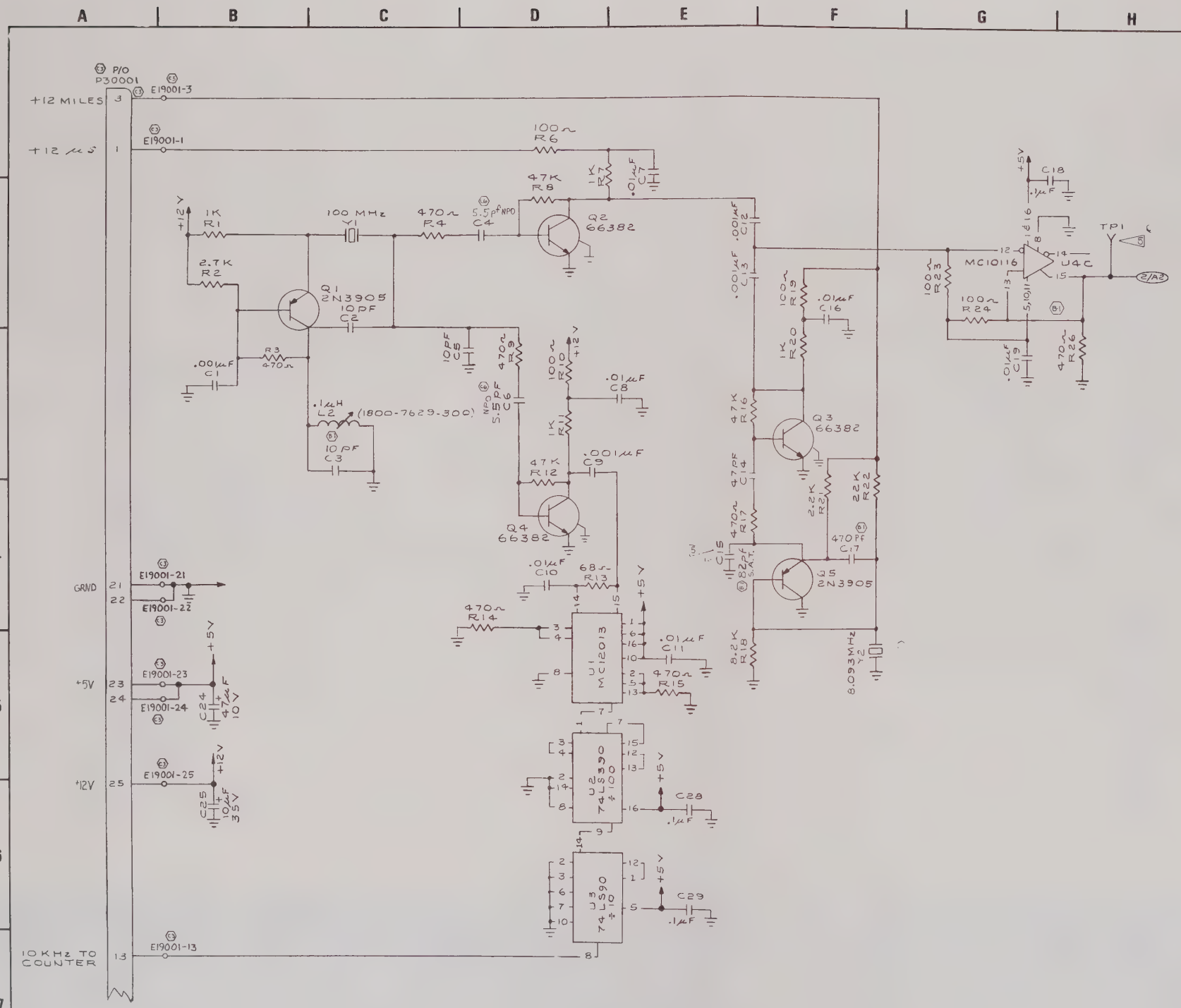

DATE	REV	CHANGE	APPD
1/4/85	B	UPDATED DWG	AO
4/11/85	B	PRODUCTION RELEASE ECN 6490	VH
5/20/85	C	INC ECN #6838 R.W.	TE
8/1/85	C-1	INC ECN 7241	AO
8/17/86	C-2	INC RC 7517	TE
10/11/86	C-3	INC RC 7797	JS
1/2/86	C-4	INC RC 8127	DAH
1/14/86	C5	INC RC 8097	DAH
2/6/86	C-6	INC ECN 7631	JS
8/21/86	C-7	INC RC 8465	VLH
3/24/88	D	INC RC 10864	AO

STANDARDS:
(UNLESS OTHERWISE NOTED:)

1. ALL REF DES CARRY AN ASSIGNED DESIGNATOR SERIES. THIS SCHEMATIC CARRIES SERIES 19XXX (E.G., R1 IS 19001).
2. ALL RESISTORS ARE 1/4 W, 5 %.
3. ALL RESISTANCE IS EXPRESSED IN OHMS.
4. ALL CAPACITANCE IS EXPRESSED IN MICROFARADS.

NOTES:

1. LAST REF DES USED:

J2	Q11	Y2
C56	TP1	E1
CR4	R53	P30001
L2	U32	

2. REF DES NOT USED:

L1	R25	J1

3. REF DES OUT OF SEQ:

C24 — 1/B5	C44 — 3/B6
C25 — 1/B6	C45 — 3/D3
C26 — 2/B3	C46 — 3/C5
C27 — 3/B3	C47 — 3/D4
C28 — 1/E6	C48 — 3/D5
C29 — 1/E6	C49 — 3/E3
C30 — 2/C2	C50 — 3/F3
C31 — 2/A6	C51 — 3/F4
C32 — 2/C5	C52 — 3/G3
C33 — 2/D3	C53 — 3/G4
C34 — 2/D5	C54 — 3/H6
C35 — 2/D7	C55 — 3/H2
C36 — 2/E3	C56 — 3/F4
C37 — 2/F5	
C38 — 2/F6	R5 — 2/A4
C39 — 2/G3	R32 — 2/A3
C40 — 2/G5	R50 — 2/A3
C41 — 2/H2	R51 — 3/A3
C42 — 2/J4	R52 — 3/A3
C43 — 3/C2	R53 — 3/A4

4. FUNCTIONS NOT USED:

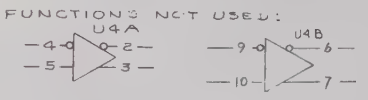

C15 (SAT) TUNES OSCILLATOR 1 CIRCUIT TO 8.091269 MHz AT TP1.

SEE SEPARATE BILL OF MATERIALS

7010-4930-300	RD-301
NEXT ASSY	MODEL
APPLICATION	

TOLERANCES UNLESS OTHERWISE SPECIFIED
ALL DIMENSIONS APPLY AFTER FINISH
DECIMALS ±.010 .XX ±.005
ANGLES ±1°
FRACTIONS ±1/64
SURFACE ROUGHNESS
REMOVE ALL BURRS
DRAWING NOT TO BE SCALED

DRAWN DATE
CHECKED DATE
APPROVED DATE

MATERIAL
FINISH

- IFR INC -
WICHITA KANSAS

TITLE SCHEMATIC - RANGE BD NO. 1 49-103

SIZE D | PART NUMBER 0000-4910-300 | REV D
SCALE | WEIGHT | SHEET 1 OF 3

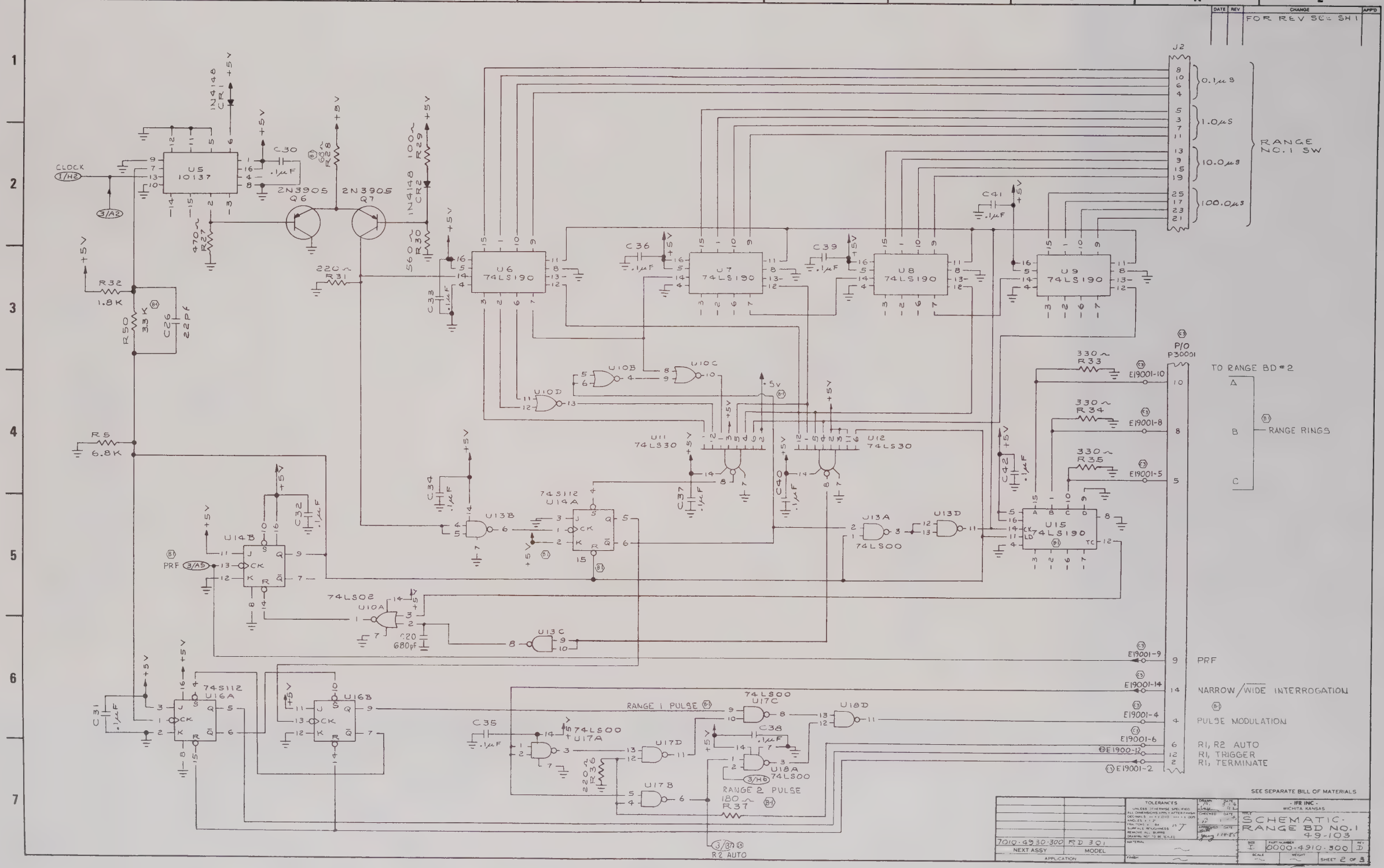
FOR REV SEE SH 1
J2
0.1μS
1.0μS
10.0μS
100.0μS
RANGE NO. 1 SW
CLOCK
1/H2
3/A2
U5 10137
1N4148 CR1
C30 .1μF
2N3905 Q6
2N3905 Q7
68Ω R28
100Ω R29
1N4148 CR2
470Ω R27
560Ω R30
220Ω R31
R32 1.8K
R50 33K
C26 22pf
R5 6.8K
U6 74LS190
U7 74LS190
U8 74LS190
U9 74LS190
C36 .1μF
C39 .1μF
C41 .1μF
C33 .1μF
U10B
U10C
U10D
U11 74LS30
U12 74LS30
C34 .1μF
C37 .1μF
C40 .1μF
C42 .1μF
74S112 U14A
U13B
U13A 74LS00
U13D
U15 74LS190
U14B
C32 .1μF
PRF 3/A5
74LS02 U10A
C20 680pf
U13C
74S112 U16A
U16B
C31 .1μF
C35 .1μF
74LS00 U17A
74LS00 U17C
U18D
U17D
U17B
U18A 74LS00
C38 .1μF
220Ω R36
RANGE 1 PULSE
RANGE 2 PULSE
180Ω R37
R2 AUTO
330Ω R33
330Ω R34
330Ω R35
E19001-10
E19001-8
E19001-5
P/O P30001
TO RANGE BD #2
RANGE RINGS
E19001-9
PRF
E19001-14
NARROW/WIDE INTERROGATION
E19001-4
PULSE MODULATION
E19001-6
R1, R2 AUTO
E1900-12
R1, TRIGGER
E19001-2
R1, TERMINATE
SEE SEPARATE BILL OF MATERIALS
IFR INC
WICHITA KANSAS
SCHEMATIC
RANGE BD NO. 1
49-103
7010-4930-300
RD 301
NEXT ASSY
MODEL
APPLICATION
0000-4910-300
SHEET 2 OF 3

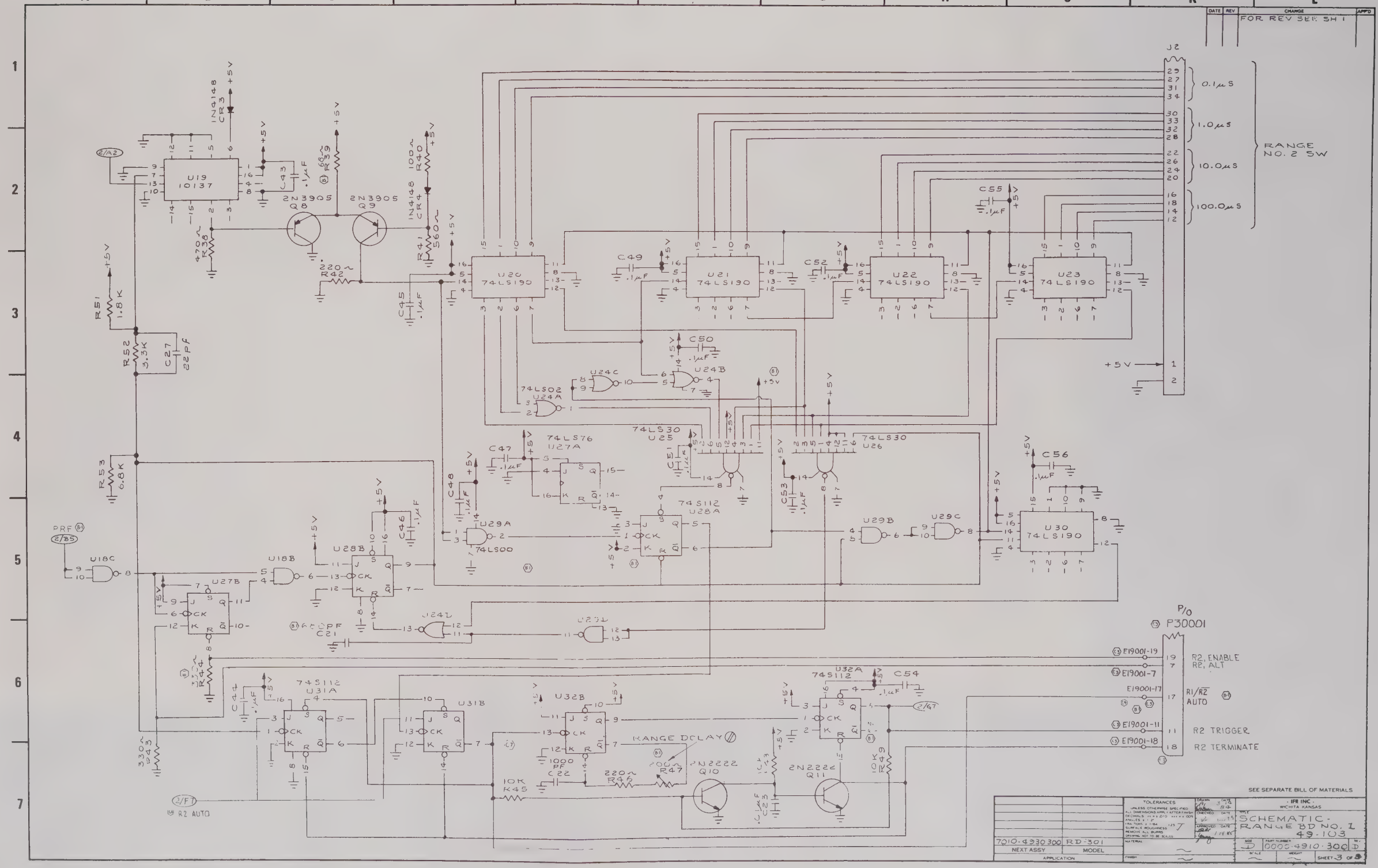
FOR REV SEE SH 1
J2
0.1μS
1.0μS
10.0μS
100.0μS
RANGE NO. 2 SW
U19 10137
2N3905 Q8
2N3905 Q9
U20 74LS190
U21 74LS190
U22 74LS190
U23 74LS190
U30 74LS190
74LS02 U24A
U24C
U24B
74LS76 U27A
74LS30 U25
74LS30 U26
74S112 U28A
U29A 74LS00
U29B
U29C
U18C
U18B
U27B
U28B
U24D
U29D
74S112 U31A
U31B
U32B
74S112 U32A
RANGE DELAY
2N2222 Q10
2N2222 Q11
P/O P30001
E19001-19
E19001-7
E19001-17
E19001-11
E19001-18
R2, ENABLE
R2, ALT
R1/R2 AUTO
R2 TRIGGER
R2 TERMINATE
R2 AUTO
SEE SEPARATE BILL OF MATERIALS
IFR INC.
WICHITA KANSAS
SCHEMATIC-RANGE BD NO. 1
49-103
7010-4930300
RD-301
NEXT ASSY
MODEL
APPLICATION
SHEET 3 OF 8

DATE	REV	CHANGE	APVD
	A	PROTOTYPE RELEASE	
7/6/84	B	REVISED & REDRAWN	
7/30/84	C	ADDED NOTES	
10-30-84	C	PRODUCTION RELEASE ECN 6490	VH

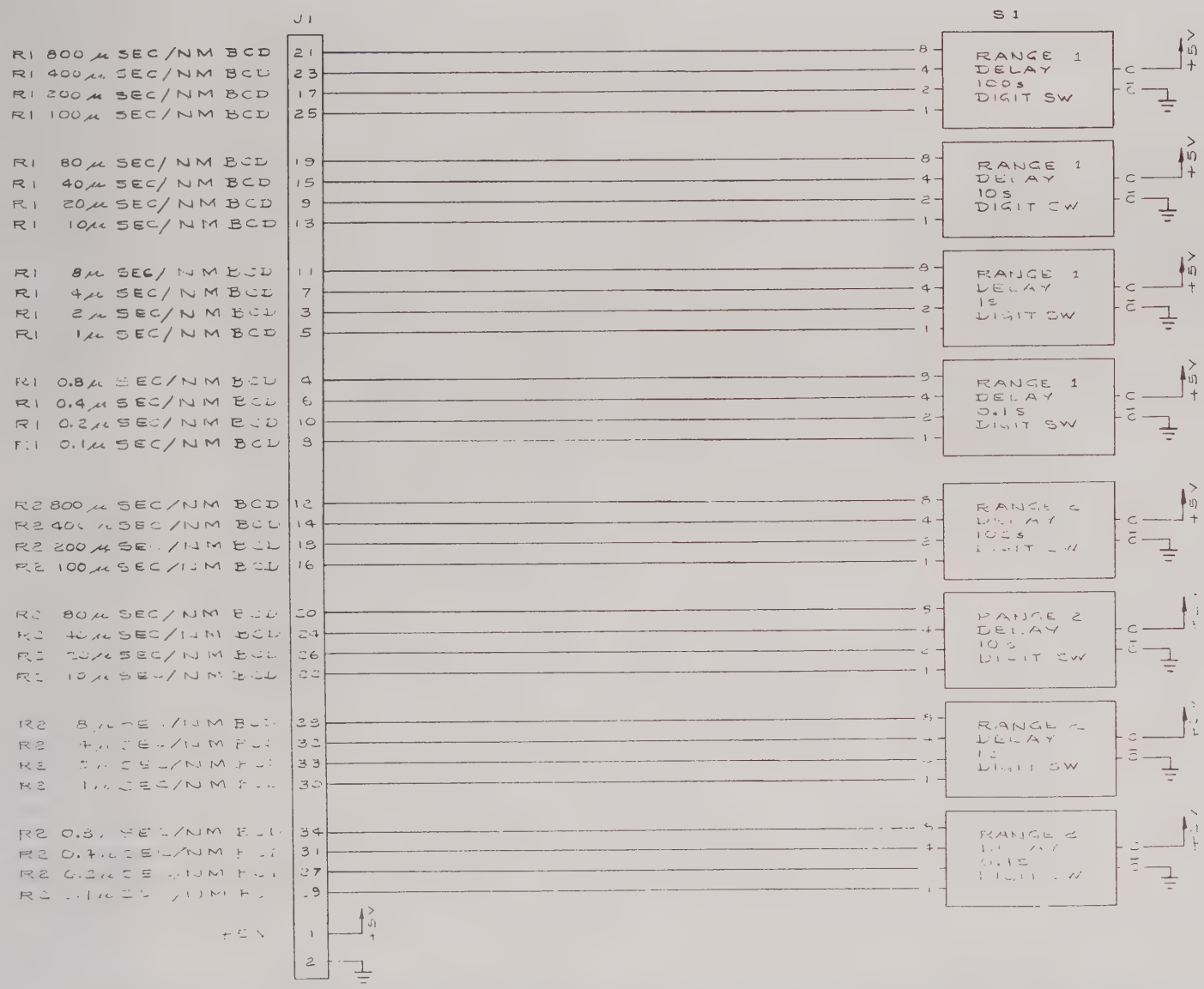

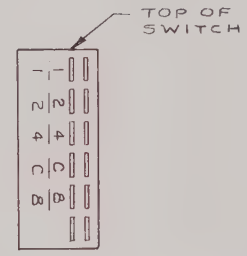

VIEW OF BACK OF SWITCH SECTION SHOWING PIN NUMBERS

NOTES
1. ALL REF. NOs CARRY AN ASSIGNED DESIGNATOR SERIES. THIS SCHEMATIC CARRIES 15XXX. (e.g. R1 IS R15001)
2. LAST REF. NO. USED
J1 S1

DASH NO	REF DES SERIES	NEXT ASSY	MODEL
	15XXX	1700-4920-800	RD-301

APPLICATION

UNLESS OTHERWISE SPECIFIED ALL DIMENSIONS APPLY AFTER FINISH
TOLERANCES
DECIMALS ±.1 ±.5
FRACTIONS ±
ANGLES ±
SURFACE FINISH √
REMOVE ALL BURRS
DO NOT SCALE THIS DRAWING

MATERIAL ~
FINISH ~

-IFR INC- 10200 West York Street Wichita, Kansas 67215

DRAWN A. Gisler DATE 9-6-84
CHECKED DATE
APPROVED Bill Young DATE 10-30-84

TITLE RANGE DIGIT SW BD SCHEMATIC DIAGRAM 49-108

SIZE D DWG NO. 0000-4910-800 REV C
SCALE ~ CODE IDENT 51190 WEIGHT ~ SHEET 1 OF 1

DATE	REV	CHANGE	APVD
2/1/85	A	PRODUCTION RELEASE ECN6490	VH
1/10/85	A-1	INC R[illegible]3097 3RC8212	JS
4/1/85	A-2	INC ECN 8464 DAH	VLH

NOTE:

1. ALL REFERENCE NUMBERS CARRY AN ASSIGNED DESIGNATOR SERIES. THIS SCHEMATIC CARRIES SERIES 33XXX (eg. R1 is R33001).
2. ALL RESISTORS ARE 1/4 w, 5%. PRECISION RESISTORS (1%) ARE DESIGNATED BY AN ASTERISK (*).
3. ALL RESISTANCE IS EXPRESSED IN OHMS.
4. ALL CAPACITANCE IS EXPRESSED IN MICROFARADS, UNLESS OTHERWISE SPECIFIED.
5. ALL INDUCTANCE IS EXPRESSED IN MICROHENRYS
6. LAST REFERENCE NUMBER USED: Q9, U2, CR6, L11, R41, C44, GL1, FL5, J5
7. R36 IS A SELECTED AT TEST (SAT.) COMPONENT.
   NOMINAL VALUE IS 8.2 K
   RANGE VALUE IS 4.7K TO 12K.

DASH NO	REF DES SERIES	NEXT ASSY	MODEL
-400	33XXX	7010-4931-400	RD-301

APPLICATION

UNLESS OTHERWISE SPECIFIED. ALL DIMENSIONS APPLY AFTER FINISH
TOLERANCES
DECIMALS: xx ± — xxx ± —
FRACTIONS ±
ANGLES ±
SURFACE FINISH √
REMOVE ALL BURRS
DO NOT SCALE THIS DRAWING

MATERIAL

FINISH

-IFR INC- 10200 West York Street Wichita, Kansas 67215

DRAWN	L A. Meis Jr	DATE 23 JAN 85
CHECKED	WB	DATE 1-27-85
APPROVED	Greenbank	DATE 1-29-85

TITLE: SCHEMATIC IF MKR/OSC RD301 (49-114)

SIZE C | DWG NO. 0000-4911-400 | REV A-2

SCALE — | CODE IDENT. 51190 | WEIGHT — | SHEET 1 OF 2

DATE	REV	CHANGE	APP'D
3/1/85	A	PRODUCTION RELEASE	VH
		SEE SHT 1 FOR REV'S	

160 MHz

180 - 240 MHz

FL33005 J33003-3 SWEEP IN

J33001 IF TUNE IN

CR1 PCO605D

CR2 PCO600D

L1 Paul Smith SK 618-3 (YELLOW)

L8 Paul Smith SK 618-5 (VIOLET)

160 MHz CUT OFF

240 MHz CUT OFF

MIXER BALANCE

F_c = 100 MHz

U1 FAIRCHILD MC7908CP

MC7908CP

U2 MC1658

CHIP

C34 5.5 - 18pf s.c. trimmer

C40-41 1uf 35V tant.

C43 1800pf

J33002 TO IF GEN

J33004 IF OUT TO PRESCALER

FL33001 J33003-1

FL33002 J33002-2

GL33001 J33003-6

FL33003 J33003-5 TO MKR SW & DISPLAY

J33005 MARKER OUT

FL33004 J33003-4 TO MKR FREQ CONTROL

PC BD 1700-2507-100

DRAWN L.A Meis, Jr.	DATE 23 Jan 85	TITLE: SCHEMATIC IF MKR / OSC RD 301 (49-114)	
CHECKED	DATE		
APPROVED	DATE		
RELEASED	DATE	PART NO 0000-4911-400	
MODEL RD 301	SCALE —	SHEET 2 OF 2	REV A2

DATE	REV	CHANGE	APVD
1	A	ADD A/C, DELETE CAP	TE
10/1/85	B	INC RC 7780 SCR	VLH
10/11/85	C	INC RC 7818	JS DAH
11/18/85	C-1	INC RC 8097	DAH JS

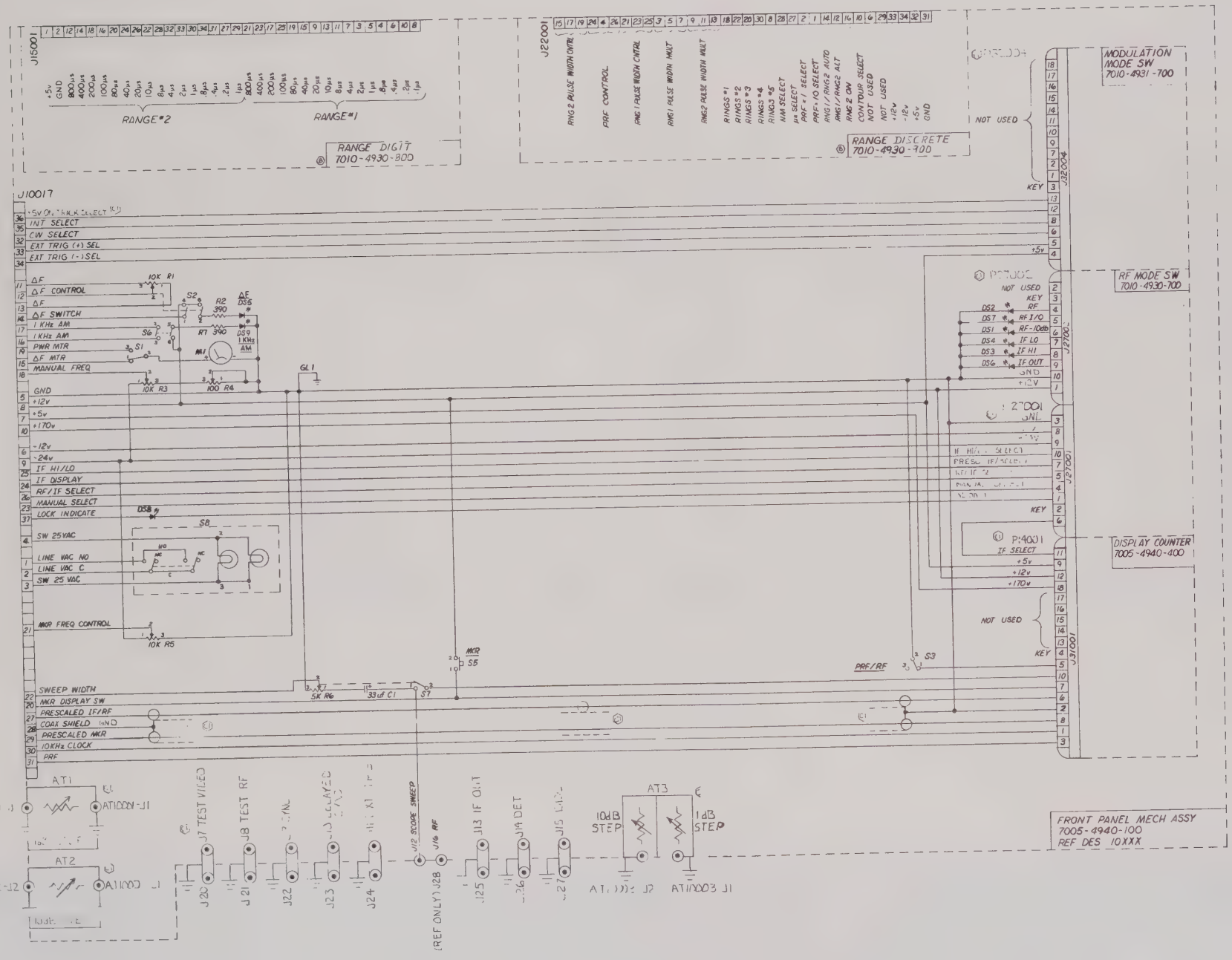

NOTE:

1. ALL REF Nº's CARRY AN ASSIGNED DESIGNATOR SERIES. THIS SCHEMATIC CARRIES SERIES 10XX (e.g. R1 is R10001).
2. ALL RESISTANCE IS EXPRESSED IN OHMS.
3. ALL CAPACITANCE IS EXPRESSED IN MICROFARADS.
4. LAST REF Nº USED: AT3, J27, S8, C1, M1, DS9, P4, GL1, R7
5. REF DESIGNATORS NOT USED: S4, AT4, J1, J2, J3, J4, J5, J18, J19

DASH NO	REF DES REMIRE	NEXT ASSY	MODEL
	10XXX	7005-4940-100	RD301

APPLICATION

UNLESS OTHERWISE SPECIFIED ALL DIMENSIONS APPLY AFTER FINISH
TOLERANCES: DECIMALS .xx ±.01, .xxx ±.005; FRACTIONS ±1/64; ANGLES ±1°; SURFACE FINISH √; REMOVE ALL BURRS; DO NOT SCALE THIS DRAWING

MATERIAL

FINISH

-IFR INC- 10200 West York Street, Wichita, Kansas 67215

DRAWN: L.A. Meis Jr. 21 FEB '85 | CHECKED | APPROVED

TITLE: MECH ASSY FRONT PANEL CIRCUIT SCHEMATIC RD 301 (49-118)

SIZE: D | DWG NO: 0000-4911-800 | REV: C

SCALE: NONE | CODE IDENT: 81180 | WEIGHT | SHEET 1 OF 1

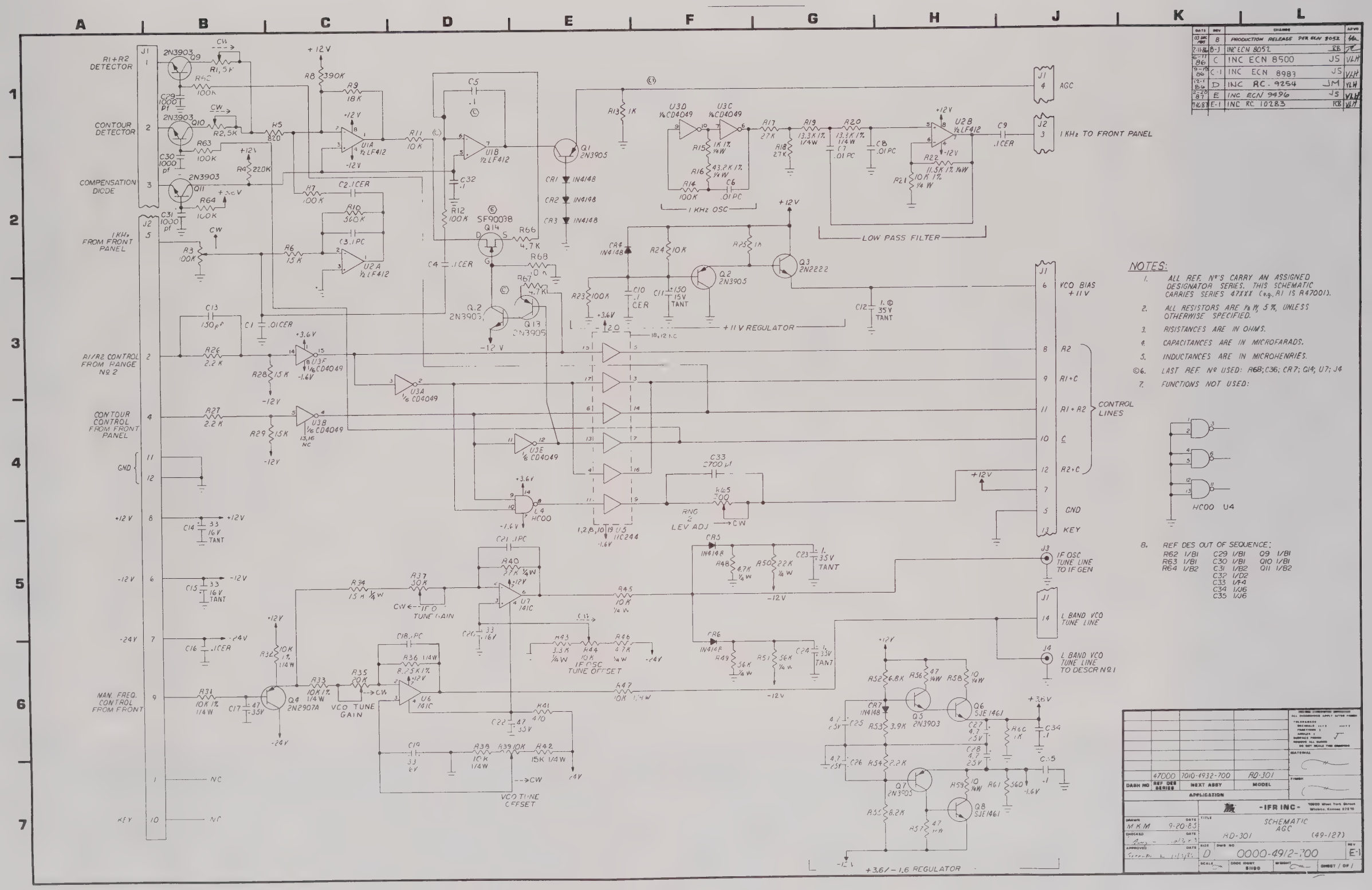

DATE	REV	CHANGE		APVD
03 DEC 1985	B	PRODUCTION RELEASE PER ECN 8052		
2-11-86	B-1	INC ECN 8052	RB	
6-17-86	C	INC ECN 8500	JS	VLH
9-19-86	C-1	INC ECN 8983	JS	VLH
12-1-86	D	INC RC. 9254	JM	VLH
2-20-87	E	INC ECN 9496	JS	VLH
7-16-87	E-1	INC RC 10283	RB	VLH

NOTES:

1. ALL REF. Nº'S CARRY AN ASSIGNED DESIGNATOR SERIES. THIS SCHEMATIC CARRIES SERIES 47XXX (e.g., R1 IS R47001).
2. ALL RESISTORS ARE 1/8 W, 5 %, UNLESS OTHERWISE SPECIFIED.
3. RISISTANCES ARE IN OHMS.
4. CAPACITANCES ARE IN MICROFARADS.
5. INDUCTANCES ARE IN MICROHENRIES.
6. LAST REF. Nº USED: R68; C36; CR7; Q14; U7; J4
7. FUNCTIONS NOT USED:
8. REF DES OUT OF SEQUENCE:

R62	1/B1	C29	1/B1	Q9	1/B1
R63	1/B1	C30	1/B1	Q10	1/B1
R64	1/B2	C31	1/B2	Q11	1/B2
		C32	1/D2		
		C33	1/F4		
		C34	1/J6		
		C35	1/J6		

DASH NO	REF DES SERIES	NEXT ASSY	MODEL
	47000	7010-4932-700	RD-301

APPLICATION

-IFR INC-

DRAWN M K M DATE 9-20-85

TITLE SCHEMATIC AGC RD-301 (49-127)

SIZE D DWG NO 0000-4912-700 REV E-1

SCALE CODE IDENT 51190 WEIGHT SHEET 1 OF 1

DATE	REV	CHANGE	APVD
3/20/85	A	PROD RELEASE ECN 0490	TE

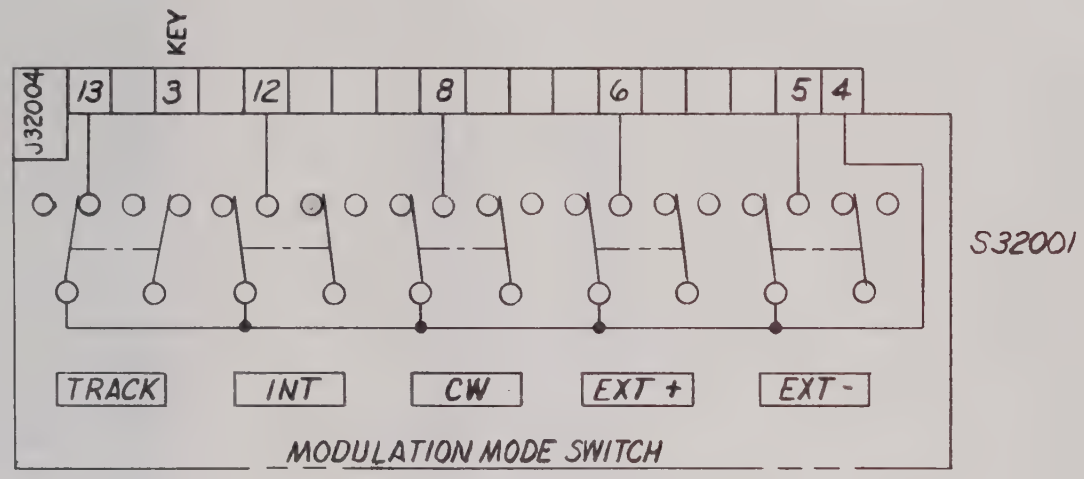

MODULATION MODE SWITCH

NOTE:

1. ALL REF Nº's CARRY AN ASSIGNED DESIGNATOR SERIES. THIS SCHEMATIC CARRIES SERIES 32XXX
2. LAST REF USED : J32004
   S32001
3. REF Nº's NOT USED: J32001
   J32002
   J32003
4. SWITCH SHOWN IN TRACKING MODE POSITION.

DASH NO	REF DES SERIES	NEXT ASSY	MODEL
	32XXX	7010-4931-700	RD301

APPLICATION

UNLESS OTHERWISE SPECIFIED
ALL DIMENSIONS APPLY AFTER FINISH
TOLERANCES:
DECIMALS: .xx = ± .xxx = ±
FRACTIONS: ±
ANGLES: ±
SURFACE FINISH: √
REMOVE ALL BURRS
DO NOT SCALE THIS DRAWING

MATERIAL

FINISH

-IFR INC- 10200 West York Street Wichita, Kansas 67215

DRAWN L.A. Meis, Jr. DATE 01 FEB '85
CHECKED DATE 2-11-85
APPROVED Greenbank DATE 2-11-85

TITLE
SCHEMATIC
MODULATION MODE SWITCH
RD 301 (49-117)

SIZE B | DWG. NO. 0000-4911-700 | REV A
SCALE — | CODE IDENT. 51190 | WEIGHT — | SHEET 1 OF 1

DATE	REV	CHANGE		APVD
10-24-84	B	PRODUCTION RELEASE	ECN 6490	VH
5/8/85	C	INC ECN #6678	MTH	VH
10-1-85	C-1	INC RC 7744	SLR	VLH
10-24-85	C-2	INC RC 7331	AM	VLH
2-19-86	C-3	INC RC 8045	DAH	VLH
1-4-86	C-4	INC RC 8168	JS	DAH
1-4-86	C-5	INC RC 8134	DAH	OJ
11-10-87	C-6	INC ECN 10457A	RB	VLH

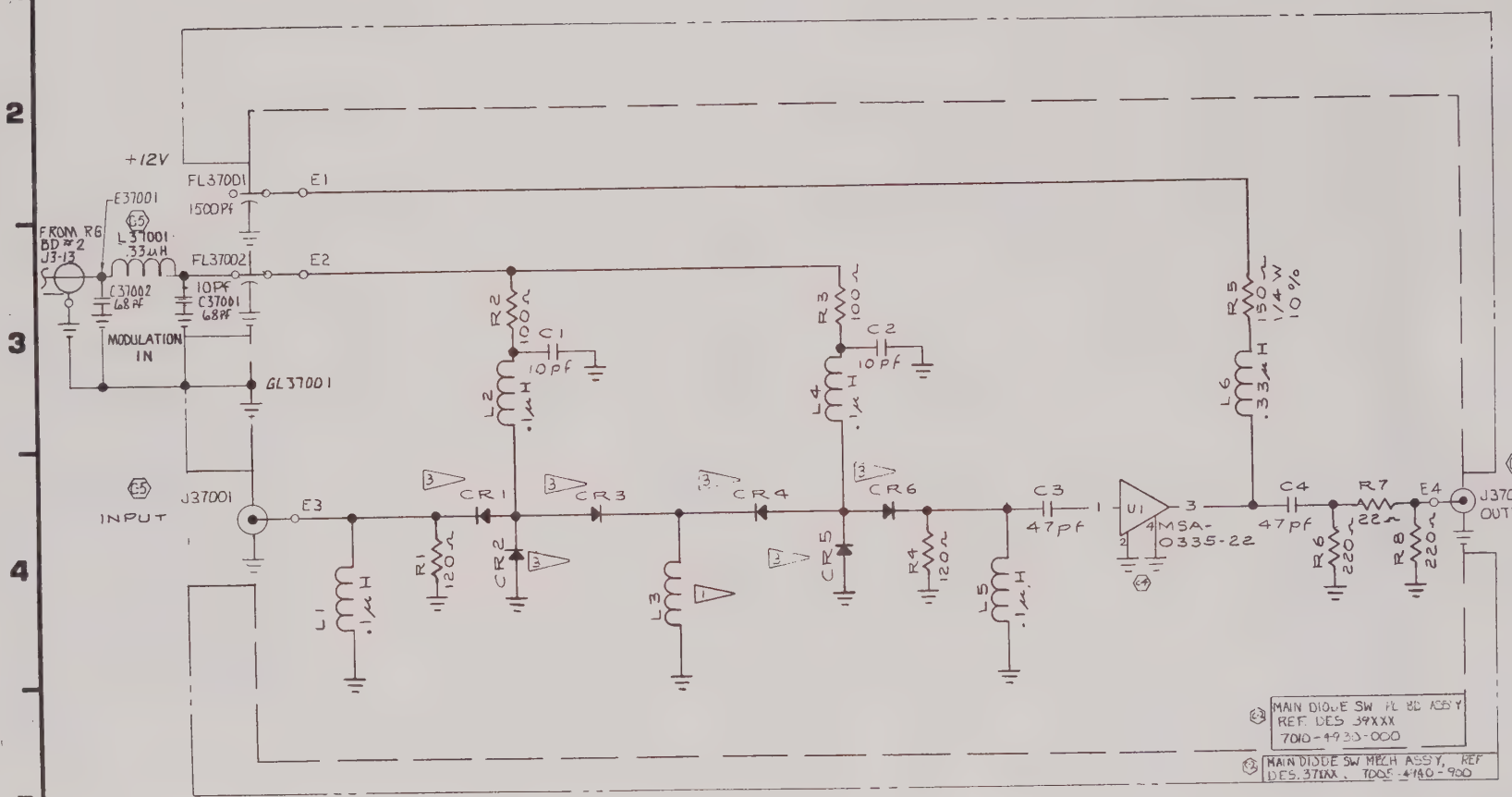

STANDARDS:
UNLESS OTHERWISE NOTED:

1. ALL REFERENCE NUMBERS CARRY AN ASSIGNED DES SERIES. THIS SCHEMATIC CARRIES SERIES 37XXX & 39000 (EG R1 IS R39001
2. ALL DIODES ARE 5082-2215

NOTES:

1. L3 IS A SINGLE STRAND FROM A 26GA STRANDED WIRE .50 LONG BETWEEN SOLDER JOINTS
2. LAST REF DES USED: C39004 J37002 R39003 CR39006 L39006 U39001 FL37002
3. CR1 THRU CR6 (HP-5082-2215) ARE SUBJECT TO DAMAGE DUE TO ELETROSTATIC CHARGES. PROPER PRECAUTIONS MUST BE USED WHEN HANDLING THESE DEVICES.
4. REF. DES NOT USED:

DASH NO	REF DES SERIES	NEXT ASSY	MODEL
-000	39XXX	7010-4930-000	RD301

APPLICATION

MATERIAL ~

FINISH ~

-IFR INC- 10200 West York Street Wichita, Kansas 67215

DRAWN A. OSBURN DATE 10-10-84
CHECKED VB DATE 10-12-84
APPROVED Bill Young DATE 10-18-84

TITLE MAIN DIODE SWITCH CIRCUIT SCHEMATIC 49-100

SIZE C DWG NO 0000-4910-000 REV C6

SCALE ~ CODE IDENT 51180 WEIGHT ~ SHEET 1 OF 1

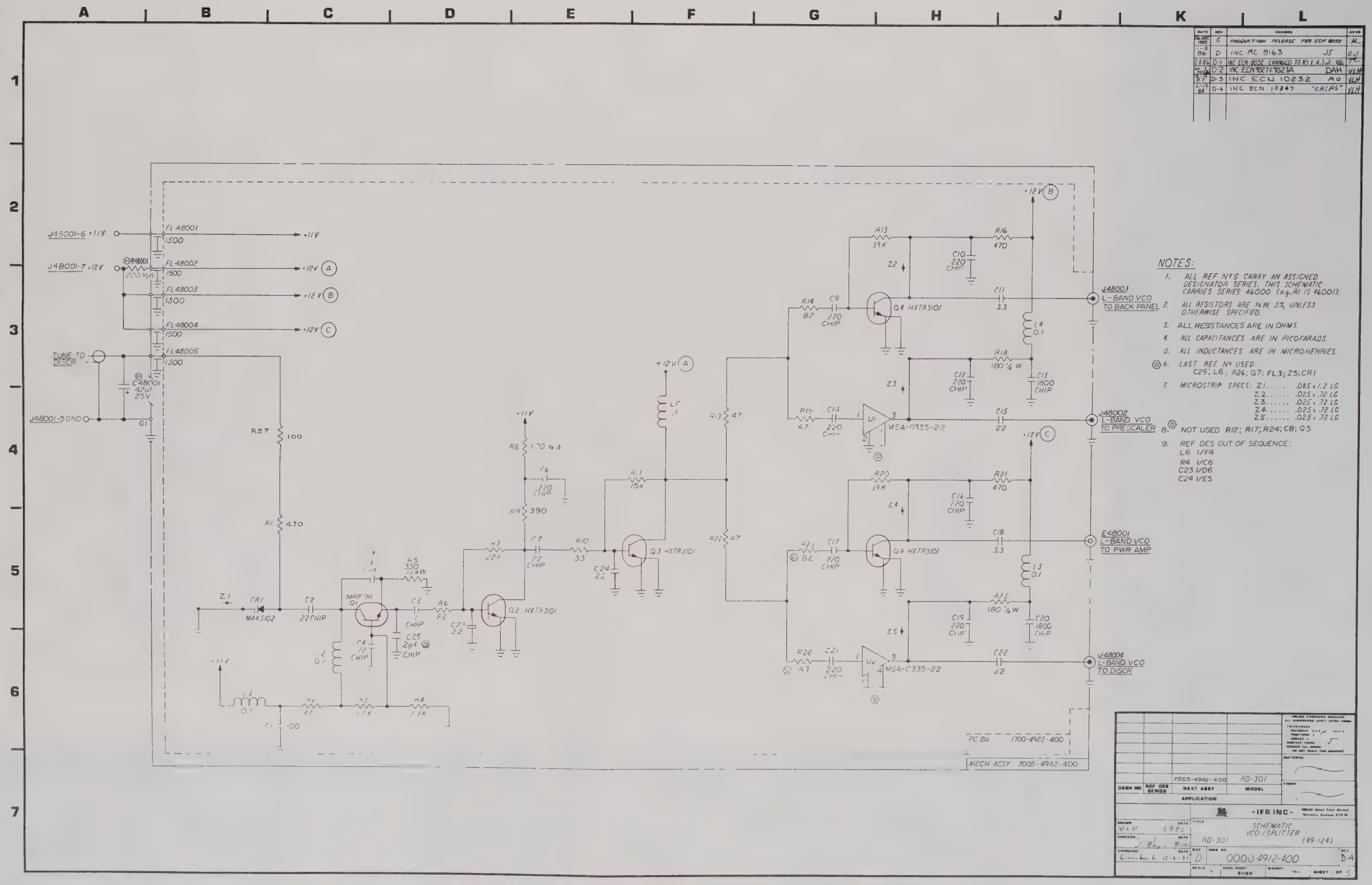

DATE	REV	CHANGE	APVD
26 DEC 1985	C	PRODUCTION RELEASE PER ECN 8052	
1-6 86	D	INC RC 8163 JS	OJ
2-8-86	D-1	INC ECN 8052 CHANGED TO R1 & 4.7uF	
9-14 87	D-2	INC ECN 9027 & 9027A DAH	VLH
9-17 87	D-3	INC ECN 10232 AO	VLH
2-19 88	D-4	INC ECN 10847 "CHIPS"	VLH

NOTES:

1. ALL REF Nº'S CARRY AN ASSIGNED DESIGNATOR SERIES. THIS SCHEMATIC CARRIES SERIES 46000 (e.g., R1 IS 46001).
2. ALL RESISTORS ARE 1/8 W, 5%, UNLESS OTHERWISE SPECIFIED.
3. ALL RESISTANCES ARE IN OHMS.
4. ALL CAPACITANCES ARE IN PICOFARADS.
5. ALL INDUCTANCES ARE IN MICROHENRIES.
6. (D) LAST REF. Nº USED: C25; L6; R26; Q7; FL3; Z5; CR1
7. MICROSTRIP SPECS: Z1..... .085 x 1.2 LG; Z2..... .025 x .72 LG; Z3..... .025 x .72 LG; Z4..... .025 x .72 LG; Z5..... .025 x .72 LG
8. (D) NOT USED R12; R17; R24; C8; Q5
9. REF DES OUT OF SEQUENCE: L6 1/F4; R4 1/C6; C23 1/D6; C24 1/E5

DASH NO	REF DES SERIES	NEXT ASSY	MODEL
		7005-4942-400	RD-301

APPLICATION

-IFR INC-

DRAWN MKM 6 9 85

TITLE SCHEMATIC VCO/SPLITTER RD-301 (49-124)

APPROVED Greenbank 12-6-85

SIZE D DWG NO 0000 4912-400 REV D-4

SCALE CODE IDENT 51180 WEIGHT SHEET 1 OF 3

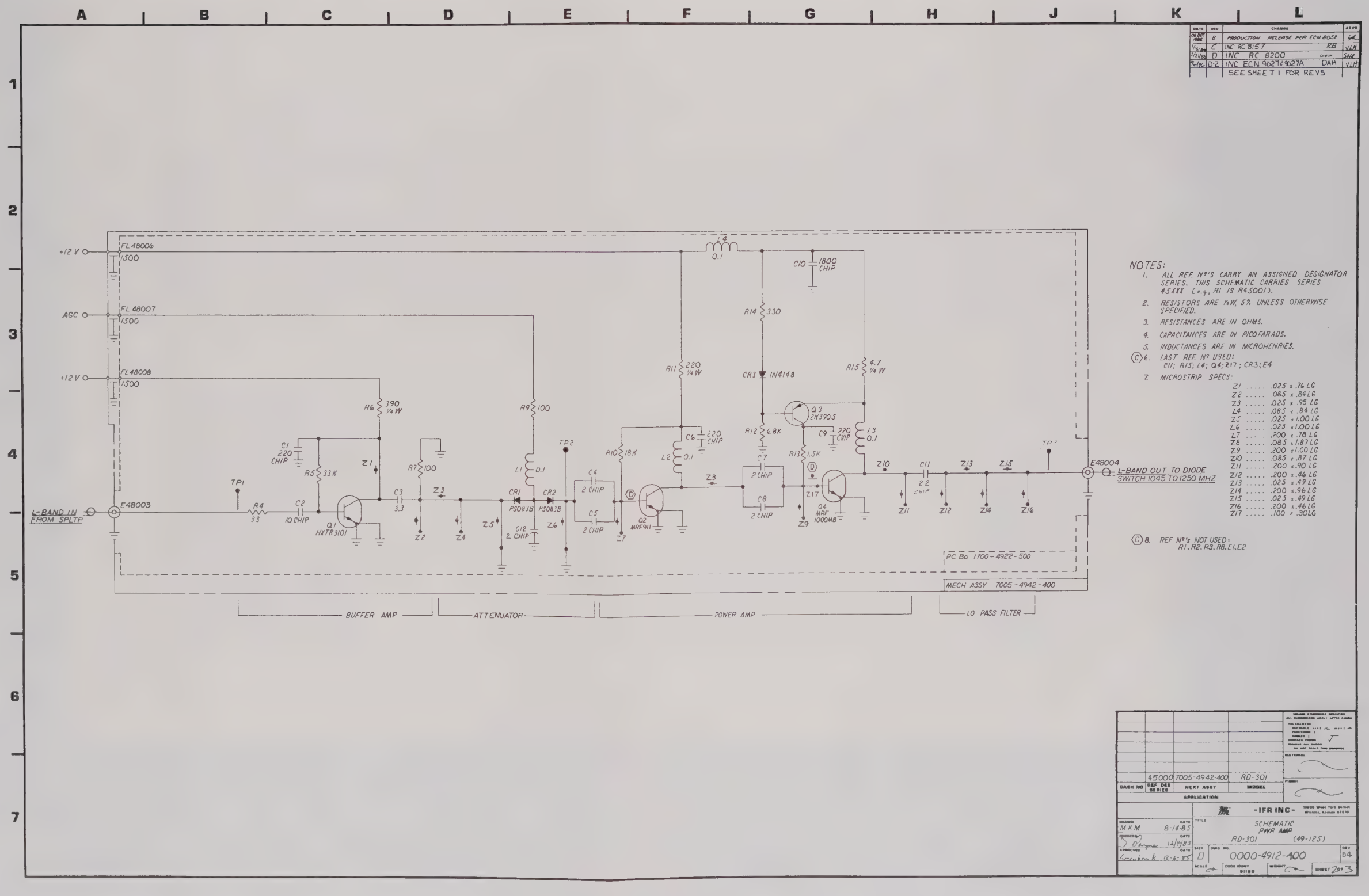

DATE	REV	CHANGE	APVD
06 DEC 1985	B	PRODUCTION RELEASE PER ECN 8052	[illegible]
1/9/86	C	INC RC 8157 KB	VLH
7/21/86	D	INC RC 8200 [illegible]	SAK
9/10/86	D-2	INC ECN 9027C9027A DAH	VLH
		SEE SHEET 1 FOR REVS	

NOTES:

1. ALL REF. Nº'S CARRY AN ASSIGNED DESIGNATOR SERIES. THIS SCHEMATIC CARRIES SERIES 45XXX (e.g., R1 IS R45001).
2. RESISTORS ARE 1/8W, 5% UNLESS OTHERWISE SPECIFIED.
3. RESISTANCES ARE IN OHMS.
4. CAPACITANCES ARE IN PICOFARADS.
5. INDUCTANCES ARE IN MICROHENRIES.
6. (C) LAST REF. Nº USED: C11; R15; L4; Q4; Z17; CR3; E4
7. MICROSTRIP SPECS:

Z1	.025 x .76 LG
Z2	.085 x .84 LG
Z3	.025 x .95 LG
Z4	.085 x .84 LG
Z5	.025 x 1.00 LG
Z6	.025 x 1.00 LG
Z7	.200 x .78 LG
Z8	.085 x 1.87 LG
Z9	.200 x 1.00 LG
Z10	.085 x .87 LG
Z11	.200 x .90 LG
Z12	.200 x .46 LG
Z13	.025 x .49 LG
Z14	.200 x .96 LG
Z15	.025 x .49 LG
Z16	.200 x .46 LG
Z17	.100 x .30 LG

8. (C) REF Nº's NOT USED: R1, R2, R3, R8, E1, E2

DASH NO	REF DES SERIES	NEXT ASSY	MODEL
	45000	7005-4942-400	RD-301

APPLICATION

-IFR INC- 10800 West York Street Wichita, Kansas 67210

DRAWN MKM DATE 8-14-85
CHECKED [illegible] DATE 12/4/85
APPROVED [illegible] DATE 12-6-85

TITLE: SCHEMATIC PWR AMP RD-301 (49-125)

SIZE D DWG NO. 0000-4912-400 REV D4

SCALE CODE IDENT 51180 WEIGHT SHEET 2 OF 3

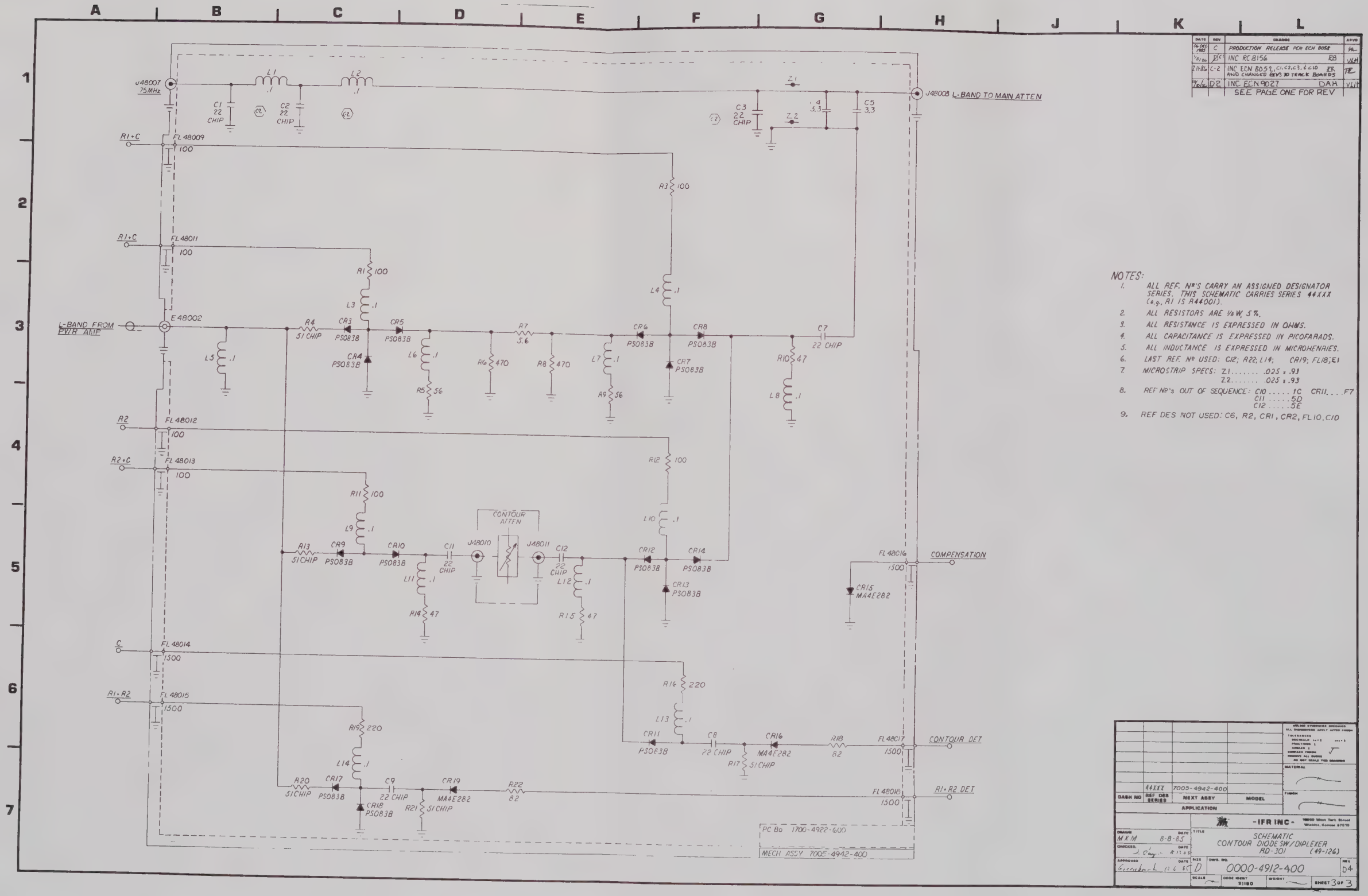

DATE	REV	CHANGE	APVD
06 DEC 1985	C	PRODUCTION RELEASE PER ECN 8058	[illegible]
1/8/86	D/C	INC RC8156 RB	VLH
2/11/86	C-2	INC ECN 8052, C1, C2, C3, & C10 AND CHANGED REVS TO TRACK BOARDS	TE
10/10/86	D2	INC ECN 9027 DAH	VLH
		SEE PAGE ONE FOR REV	

NOTES:

1. ALL REF. Nº'S CARRY AN ASSIGNED DESIGNATOR SERIES. THIS SCHEMATIC CARRIES SERIES 44XXX (e.g., R1 IS R44001).
2. ALL RESISTORS ARE 1/8 W, 5%.
3. ALL RESISTANCE IS EXPRESSED IN OHMS.
4. ALL CAPACITANCE IS EXPRESSED IN PICOFARADS.
5. ALL INDUCTANCE IS EXPRESSED IN MICROHENRIES.
6. LAST REF. Nº USED: C12; R22; L14; CR19; FL18; E1
7. MICROSTRIP SPECS: Z1 ..... .025 x .93
   Z2 ..... .025 x .93
8. REF Nº's OUT OF SEQUENCE: C10 ..... 1C CR11 .... F7
   C11 ..... 5D
   C12 ..... 5E
9. REF DES NOT USED: C6, R2, CR1, CR2, FL10, C10

DASH NO	REF DES SERIES	NEXT ASSY	MODEL
	44XXX	7005-4942-400	

APPLICATION

-IFR INC-

DRAWN MKM DATE 8-8-85

CHECKED [illegible] DATE 8-13-85

APPROVED [illegible] DATE 12-6-85

TITLE: SCHEMATIC CONTOUR DIODE SW/DIPLEXER RD-301 (49-126)

SIZE D DWG. NO. 0000-4912-400 REV D4

SCALE — CODE IDENT 91190 WEIGHT — SHEET 3 OF 3

DATE	REV	CHANGE	APVD
09 DEC 1985	A	PRODUCTION RELEASE PER ECN 8052	
1-4-86	B	INC RC 8148 JS	OJ
2-10-86	C	INC ECN 8052 ADDED PIN 14 CHG 13 TO 15	
6-3-86	D	INC ECN 8641 RB	VLH

P/O J47001 (D)

R2	8	(D) VIO
R1+C	9	(D) GRA
C	10	(D) WHT
R1+R2	11	(D) WHT / BRN
R2+C	12	(D) WHT / RED
+11v	6	(D) GRN
KEY	13 (C)	
+12v	7	(D) RED
GND	5	(C)(D) (D) BLK
	14	N/C
AGC	4	(D) YEL / WHT

J47002 (B)

J47004 (C)(D) (B)

AGC Bd
7010-4932-700
REF DES 47XXX

CONTOUR DIODE SWITCH
REF DES 44XXX

(D) GRA → FL48011
FL48012
FL48009
FL48014
FL48015
FL48013
E48002 (B)

FL48016 (D) ORN / WHT
(B) GL48002 (D) BLK
FL48018 (D) BRN
FL48017 (D) BLU

P/O J47001 (D)

3	COMPENSATION DIODE (C)
15 (D)	GND
1	R1 OR R2 DET
2	CONTOUR DET

VCO / SPLITTER
REF DES 46XXX

FL48001
R48001 220Ω 1/4 W
FL48002
(D) RED FL48003
(D) RED FL48004
FL48005
GL48001 (B)(D)

FROM DISC Bd Nº 1
COAX # 22 (C)
6050-1022-320 (REF ONLY) (B)
C48001 4.7µf +

E48001
6042-4986-200
(B)

6042-4986-100

POWER AMP
REF DES 45XXX

E48003
(D) RED FL48008
(D) RED FL48006
FL48007

E48004

VCO NO 2 MECH ASS'Y
7005-4942-400
45X/X REF DES (B)

-900	48000	7005-4942-400	RD-301
DASH NO	REF DES SERIES	NEXT ASSY	MODEL

APPLICATION

UNLESS OTHERWISE SPECIFIED ALL DIMENSIONS APPLY AFTER FINISH
TOLERANCES
DECIMALS .xx ± .xxx ±
FRACTIONS ±
ANGLES ±
SURFACE FINISH √
REMOVE ALL BURRS
DO NOT SCALE THIS DRAWING
MATERIAL
FINISH

-IFR INC- 10200 West York Street Wichita, Kansas 67215

DRAWN L.A. Meis Jr. 05 DEC 85	TITLE VCO Nº2 MODULE INTERCONNECT RD 301 (49-129)
CHECKED Greenbank 12-6 85	
APPROVED Greenbank 12-9-85	SIZE C DWG. NO. 0000-4912-900 REV D
SCALE —	CODE IDENT 51190 WEIGHT — SHEET 1 OF 1

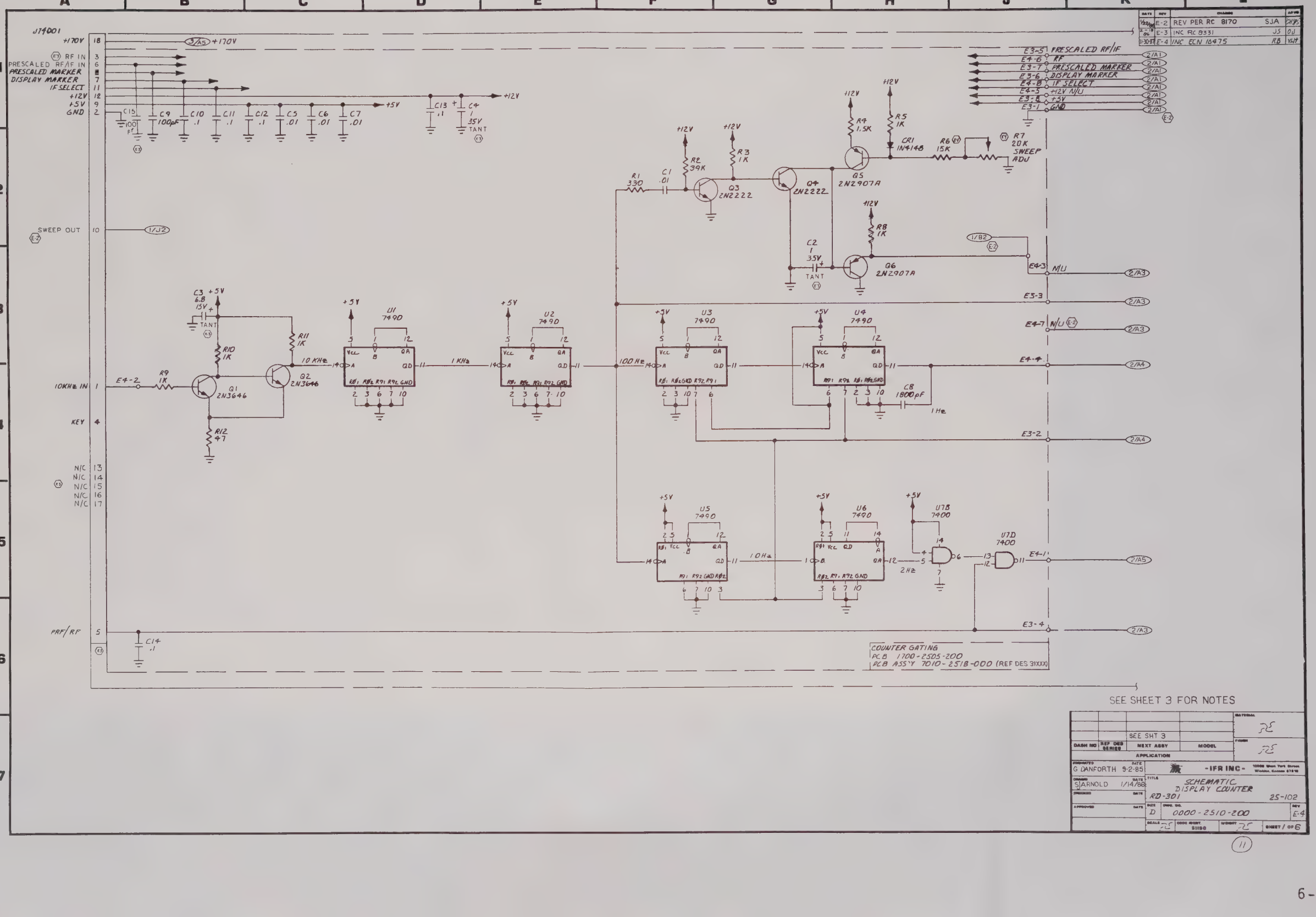
J19001
+17OV
RF IN
PRESCALED RF/IF IN
PRESCALED MARKER
DISPLAY MARKER
IF SELECT
+12V
+5V
GND
SWEEP OUT
10KHz IN
KEY
N/C
PRF/RF
C15 100 PF
C9 100pF
C10 .1
C11 .1
C12 .1
C5 .01
C6 .01
C7 .01
C13 .1
C4 1 35V TANT
C3 6.8 15V TANT
C14 .1
C8 1800pF
R1 330
R2 39K
R3 1K
R5 1K
R6 15K
R7 20K SWEEP ADJ
R9 1.5K
R8 1K
R9 1K
R10 1K
R11 1K
R12 47
C1 .01
C2 1 35V TANT
CR1 1N4148
Q1 2N3646
Q2 2N3646
Q3 2N2222
Q4 2N2222
Q5 2N2907A
Q6 2N2907A
U1 7490
U2 7490
U3 7490
U4 7490
U5 7490
U6 7490
U7A 7400
U7D 7400
10 KHz
1 KHz
100 Hz
10Hz
2Hz
1Hz
E4-2
E3-5 PRESCALED RF/IF
E4-6 RF
E3-7 PRESCALED MARKER
E3-6 DISPLAY MARKER
E4-8 IF SELECT
E4-5 +12V N/U
E3-9 +5V
E3-1 GND
E4-3 N/U
E3-3
E4-7 N/U
E4-4
E3-2
E4-1
E3-4
COUNTER GATING
PC B 1700-2505-200
PCB ASS'Y 7010-2518-000 (REF DES 31XXX)
SEE SHEET 3 FOR NOTES
- IFR INC -
SCHEMATIC
DISPLAY COUNTER
RD-301
25-102
0000-2510-200
E-4
SHEET 1 OF 6

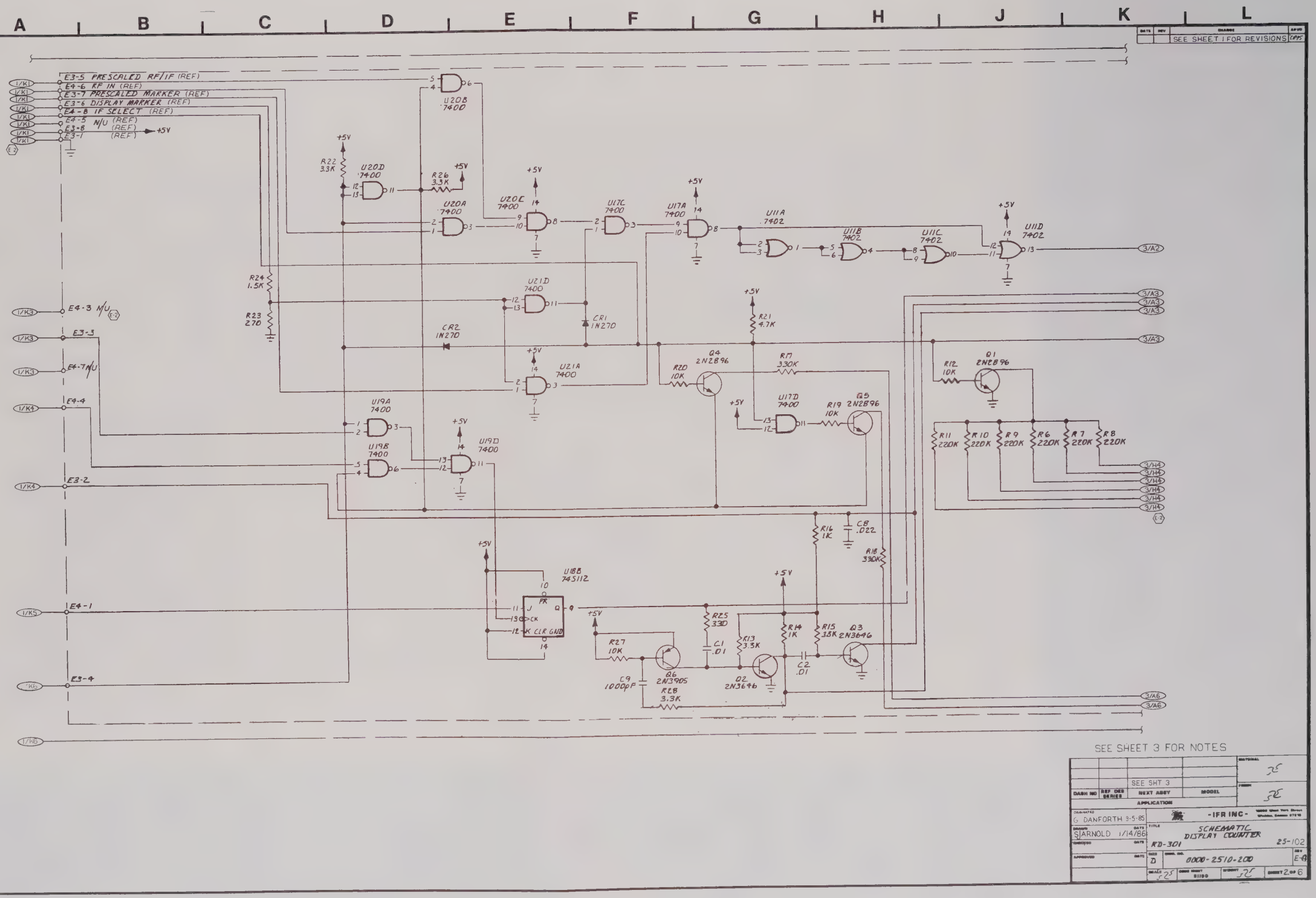
SEE SHEET 1 FOR REVISIONS
E3-5 PRESCALED RF/IF (REF)
E4-6 RF IN (REF)
E3-7 PRESCALED MARKER (REF)
E3-6 DISPLAY MARKER (REF)
E4-8 IF SELECT (REF)
E4-5 N/U (REF)
E3-8 (REF)
E3-1 (REF)
+5V
U20B 7400
U20D 7400
U20A 7400
U20C 7400
U17C 7400
U17A 7400
U11A 7402
U11B 7402
U11C 7402
U11D 7402
3/A2
R22 3.3K
R26 3.3K
R24 1.5K
R23 270
U21D 7400
U21A 7400
CR1 1N270
CR2 1N270
R21 4.7K
3/A3
Q4 2N2896
R20 10K
R17 330K
U17D 7400
R19 10K
Q5 2N2896
Q1 2N2896
R12 10K
R11 220K
R10 220K
R9 220K
R6 220K
R7 220K
R8 220K
3/H4
U19A 7400
U19B 7400
U19D 7400
E4-3 N/U
E3-3
E4-7 N/U
E4-4
E3-2
E4-1
E3-4
U18B 74S112
PR
J
CK
K CLR GND
Q
R16 1K
C8 .022
R18 330K
R25 330
C1 .01
R13 3.3K
R14 1K
R15 35K
Q3 2N3646
C2 .01
R27 10K
C9 1000pF
Q6 2N3905
R28 3.3K
Q2 2N3646
3/A6
SEE SHEET 3 FOR NOTES
SEE SHT 3
NEXT ASSY
MODEL
APPLICATION
G DANFORTH 9-5-85
S ARNOLD 1/14/86
-IFR INC-
SCHEMATIC
DISPLAY COUNTER
RD-301
25-102
0000-2510-200
SHEET 2 OF 6

DATE	REV	CHANGE	APVD
		SEE SHEET 1 FOR REVISIONS	

COUNTER LOGIC
PCB 1700-2505-000
PCB ASS'Y 7010-4931-600 (REF DES 21XXX)

STANDARDS:
(UNLESS OTHERWISE NOTED)
1. ALL REF NOS CARRY AN ASSIGNED DESIGNATOR SERIES. THIS SCHEMATIC CARRIES SERIES: 14000,21000,26000,31000 (E.G. R1 IS 21001, ETC.).
   A. MECH ASS'Y 7005-4940-400
   B. PCB ASS'Y 7010-4931-600
   C. PCB ASS'Y 7010-2517-800
   D. PCB ASS'Y 7010-2518-000
2. ALL RESISTORS ARE ⅛ W, ±5 % TOLERANCE
3. ALL RESISTANCE IS EXPRESSED IN OHMS
4. ALL CAPACITANCE IS EXPRESSED IN MICRO FARADS.
5. ALL INDUCTANCE IS EXPRESSED IN MICRO HENRY'S

NOTES:
1. LAST REF. NOS. USED:
   21000 SERIES: C9, U21, R28, Q8, CR2, E4
   26000 SERIES: R11, DS1, E2
   31000 SERIES: C7, R12, Q6, U7, E4
   14000 SERIES: U1
2. REF NO'S NOT USED:
   21000 SERIES: E1
   31000 SERIES: E2

COUNTER DISPLAY
PCB 1700-2505-100
PCB ASS'Y 7010-2517-800 (REF DES 26XXX)

MECH ASS'Y 7005-4940-400 (REF DES 14XXX)

DASH NO	REF DES SERIES	NEXT ASSY	MODEL
		7010-4931-600	RD-301
		7010-2517-000	RD-301, 300
		7010-2518-000	RD-301, 300

APPLICATION

MATERIAL
FINISH

ORIGINATED G DANFORTH 9-8-85
DRAWN S JARNOLD 1-15-86
CHECKED
APPROVED

-IFR INC-

TITLE: SCHEMATIC DISPLAY COUNTER
RD-301 25-102

SIZE D | DWG NO 0080-2510-200 | REV E-A

SCALE | CODE IDENT 81180 | WEIGHT | SHEET 3 OF 6

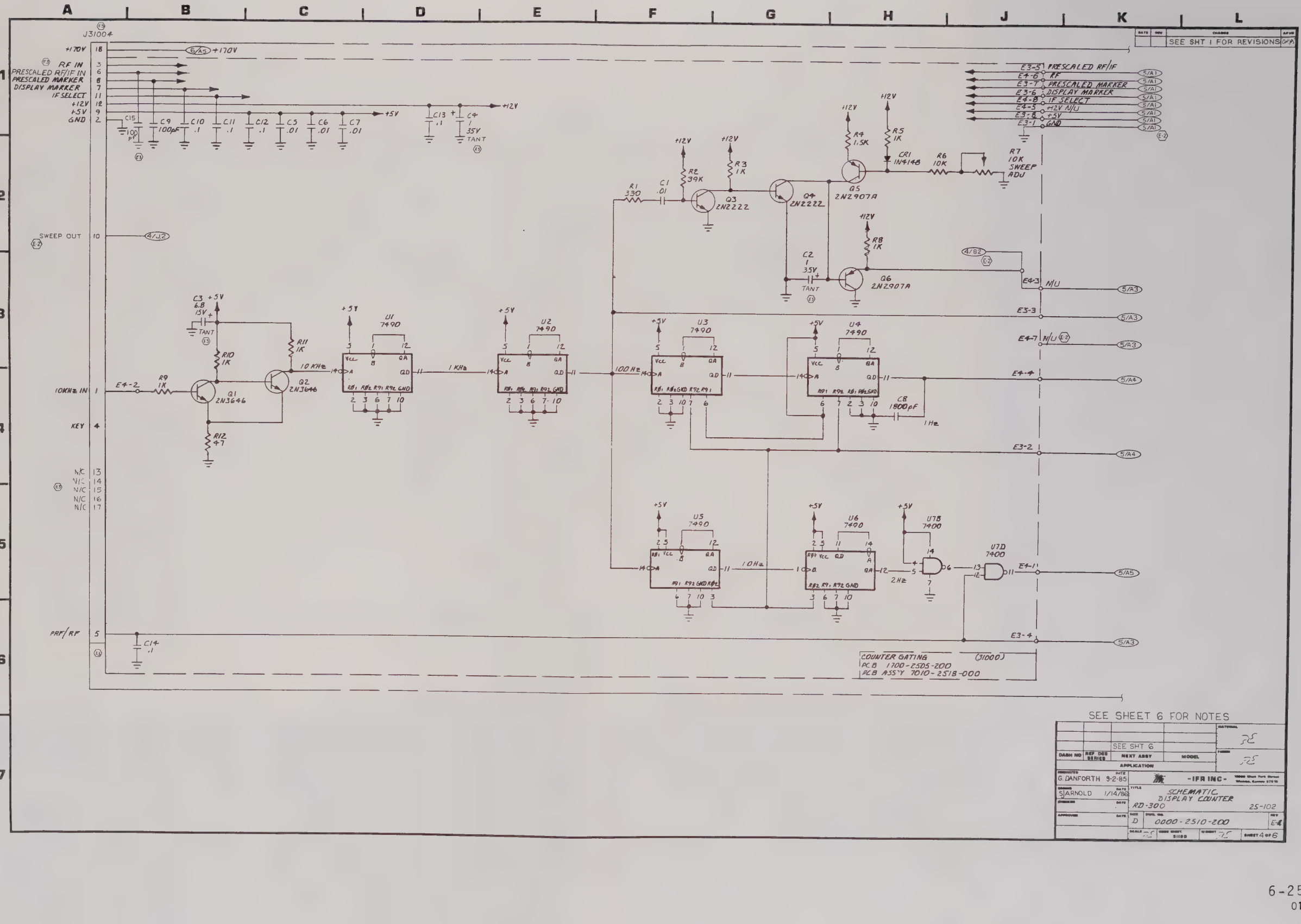
J31004
+17DV
RF IN
PRESCALED RF/IF IN
PRESCALED MARKER
DISPLAY MARKER
IF SELECT
+12V
+5V
GND
SWEEP OUT
10KHz IN
KEY
N/C
PRF/RF
C15 100 pF
C9 100pF
C10 .1
C11 .1
C12 .1
C5 .01
C6 .01
C7 .01
C13 .1
C4 1 35V TANT
C3 6.8 15V TANT
R10 1K
R11 1K
R12 47
R9 1K
Q1 2N3646
Q2 2N3646
10 KHz
1 KHz
100 Hz
10 Hz
2 Hz
U1 7490
U2 7490
U3 7490
U4 7490
U5 7490
U6 7490
U7A 7400
U7B 7400
R1 330
C1 .01
R2 39K
R3 1K
Q3 2N2222
Q4 2N2222
R4 1.5K
R5 1K
CR1 IN4148
R6 10K
R7 10K SWEEP ADJ
Q5 2N2907A
C2 1 35V TANT
R8 1K
Q6 2N2907A
C8 1800pF
C14 .1
E3-5 PRESCALED RF/IF
E4-6 RF
E3-7 PRESCALED MARKER
E3-6 DISPLAY MARKER
E4-8 IF SELECT
E4-5 +12V N/U
E3-8 +5V
E3-1 GND
E4-3 N/U
E3-3
E4-7 N/U
E4-4
E3-2
E4-1
E3-4
COUNTER GATING (31000)
PCB 1700-2505-200
PCB ASSY 7010-2518-000
SEE SHT 1 FOR REVISIONS
SEE SHEET 6 FOR NOTES
SEE SHT 6
G. DANFORTH 9-2-85
S. ARNOLD 1/14/86
IFR INC
SCHEMATIC DISPLAY COUNTER
RD-300
25-102
0000-2510-200
SHEET 4 OF 6

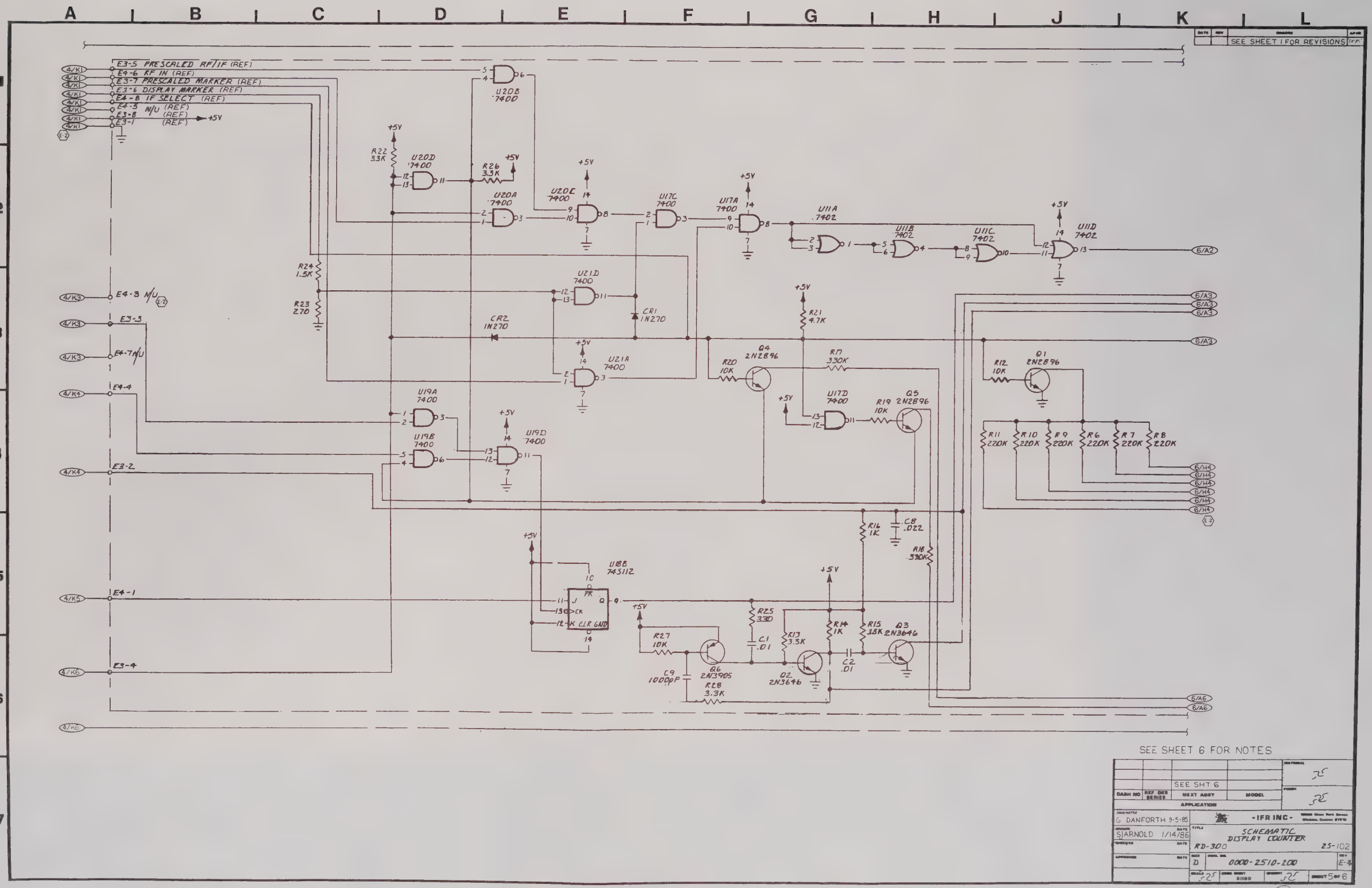
SEE SHEET 1 FOR REVISIONS
E3-5 PRESCALED RF/IF (REF)
E4-6 RF IN (REF)
E3-7 PRESCALED MARKER (REF)
E3-6 DISPLAY MARKER (REF)
E4-8 IF SELECT (REF)
E4-3 N/U (REF)
E3-8 (REF)
E3-1 (REF)
+5V
U20B 7400
U20D 7400
U20A 7400
U20C 7400
U17C 7400
U17A 7400
U11A 7402
U11B 7402
U11C 7402
U11D 7402
R22 3.3K
R26 3.3K
R24 1.5K
R23 270
U21D 7400
U21A 7400
CR1 1N270
CR2 1N270
R21 4.7K
Q4 2N2896
R20 10K
R17 330K
U17D 7400
R19 10K
Q5 2N2896
Q1 2N2896
R12 10K
R11 220K
R10 220K
R9 220K
R6 220K
R7 220K
R8 220K
U19A 7400
U19B 7400
U19D 7400
U18B 74S112
R16 1K
C8 .022
R18 330K
R25 330
C1 .01
R13 3.5K
R14 1K
R15 15K
Q3 2N3646
R27 10K
C9 1000pF
Q6 2N3905
R28 3.3K
Q2 2N3646
C2 .01
E4-3 N/U
E3-3
E4-7 N/U
E4-4
E3-2
E4-1
E3-4
6/A2
6/A3
6/H4
6/A6
SEE SHEET 6 FOR NOTES
SEE SHT 6
NEXT ASSY
MODEL
APPLICATION
G. DANFORTH 9-5-85
S. ARNOLD 1/14/86
- IFR INC -
SCHEMATIC
DISPLAY COUNTER
RD-300
25-102
0000-2510-200
E-4
SHEET 5 OF 6

COUNTER LOGIC
PCB 1700-2505-000
PCB ASS'Y 7010-2517-900

DATE	BY	CHANGE	APVD
		SEE SHEET 1 FOR REVISIONS	

STANDARDS:
(UNLESS OTHERWISE NOTED)
1. ALL REF NOS CARRY AN ASSIGNED DESIGNATOR SERIES. THIS SCHEMATIC CARRIES SERIES: 26000 FOR 7010-2517-800, 31000 FOR 7010-2518-000 (E.G. R1 IS 31001 ETC.)
   A. MECH ASS'Y 7040-2517-700
   B. PCB ASS'Y 7010-2517-900
   C. PCB ASS'Y 7010-2517-800
   D. PCB ASS'Y 7010-2518-000
2. ALL RESISTORS ARE ¼ W, ±5% TOLERANCE
3. ALL RESISTANCE IS EXPRESSED IN OHMS
4. ALL CAPACITANCE IS EXPRESSED IN MICRO FARADS.
5. ALL INDUCTANCE IS EXPRESSED IN MICRO HENRY'S

NOTES:
1. LAST REF. NOS. USED:
   21000 SERIES: C9, U21, R28, Q6, CR2, E4
   26000 SERIES: R11, DS1, E2
   31000 SERIES: C7, R12, Q6, U7, E4
   14000 SERIES: J1
2. REF NO'S NOT USED:
   21000 SERIES: E1
   31000 SERIES: E2

COUNTER DISPLAY
PCB 1700-2505-100
PCB ASS'Y 7010-2517-800 (REF DES 26XXX)

MECH ASS'Y 7040-2517-700

DASH NO	REF DES SERIES	NEXT ASSY	MODEL
		7010-2517-900	RD 300
		7010-2517-800	RD 300, 301
		7010-2518-000	RD 300, 301

APPLICATION

ORIGINATED G. DANFORTH 9-8-85
DRAWN S. ARNOLD 1-15-86
CHECKED
APPROVED

-IFR INC-

TITLE: SCHEMATIC, DISPLAY COUNTER
RD-300 25-102
SIZE D | DWG. NO. 0000-2510-200 | REV E-A
SCALE | CODE IDENT. 81123 | WEIGHT | SHEET 6 OF 6

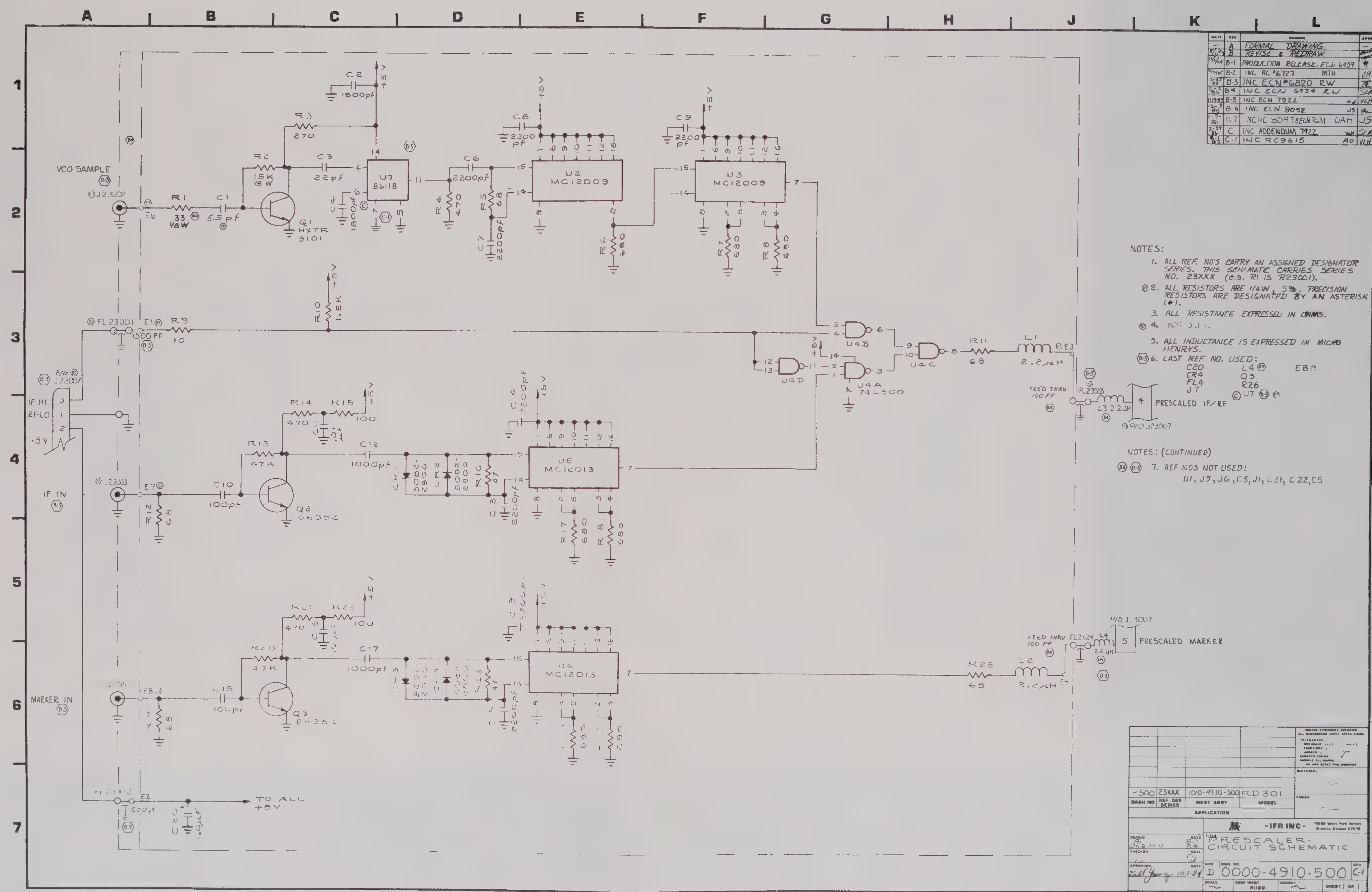
VCO SAMPLE
IF IN
MARKER IN
IF-HI
RF-LO
+5V
TO ALL +5V
PRESCALED IF/RF
PRESCALED MARKER
U2 MC12009
U3 MC12009
U5 MC12013
U6 MC12013
U7 8611B
U4A 74LS00
NOTES:
1. ALL REF. NO'S CARRY AN ASSIGNED DESIGNATOR SERIES. THIS SCHEMATIC CARRIES SERIES NO. 23XXX (e.g. R1 IS R23001).
2. ALL RESISTORS ARE 1/4W, 5%. PRECISION RESISTORS ARE DESIGNATED BY AN ASTERISK (*).
3. ALL RESISTANCE EXPRESSED IN OHMS.
5. ALL INDUCTANCE IS EXPRESSED IN MICRO HENRYS.
6. LAST REF NO. USED: C20 L4 E8 CR4 Q3 FL4 R26 U7
NOTES: (CONTINUED)
7. REF NOS. NOT USED: U1, J5, J6, C5, J1, C21, C22, E5
FORMAL DRAWING
REVISE & REDRAW
PRODUCTION RELEASE. ECN 6459
INC RC 6727
INC ECN 6820
INC ECN 6934
INC ECN 7922
INC ECN 8052
INC RC 8097 & ECN 7631
INC ADDENDUM 7922
INC RC 9615
-500 23XXX 1010-4930-500 RD 301
DASH NO REF DES SERIES NEXT ASSY MODEL
APPLICATION
IFR INC
PRESCALER CIRCUIT SCHEMATIC
D 0000-4910-500 C1

DATE	REV	CHANGE	APP'D
1/18/85	A	PRODUCTION RELEASE ECN 9450	VH
1/21/85	A-1	INC RC 8097 & RC 8220 DAH	JS
2/18/87	A-2	INC ECN 9450 A0	VLH
3/16/87	A-3	INC ECN 9616 A0	VLH

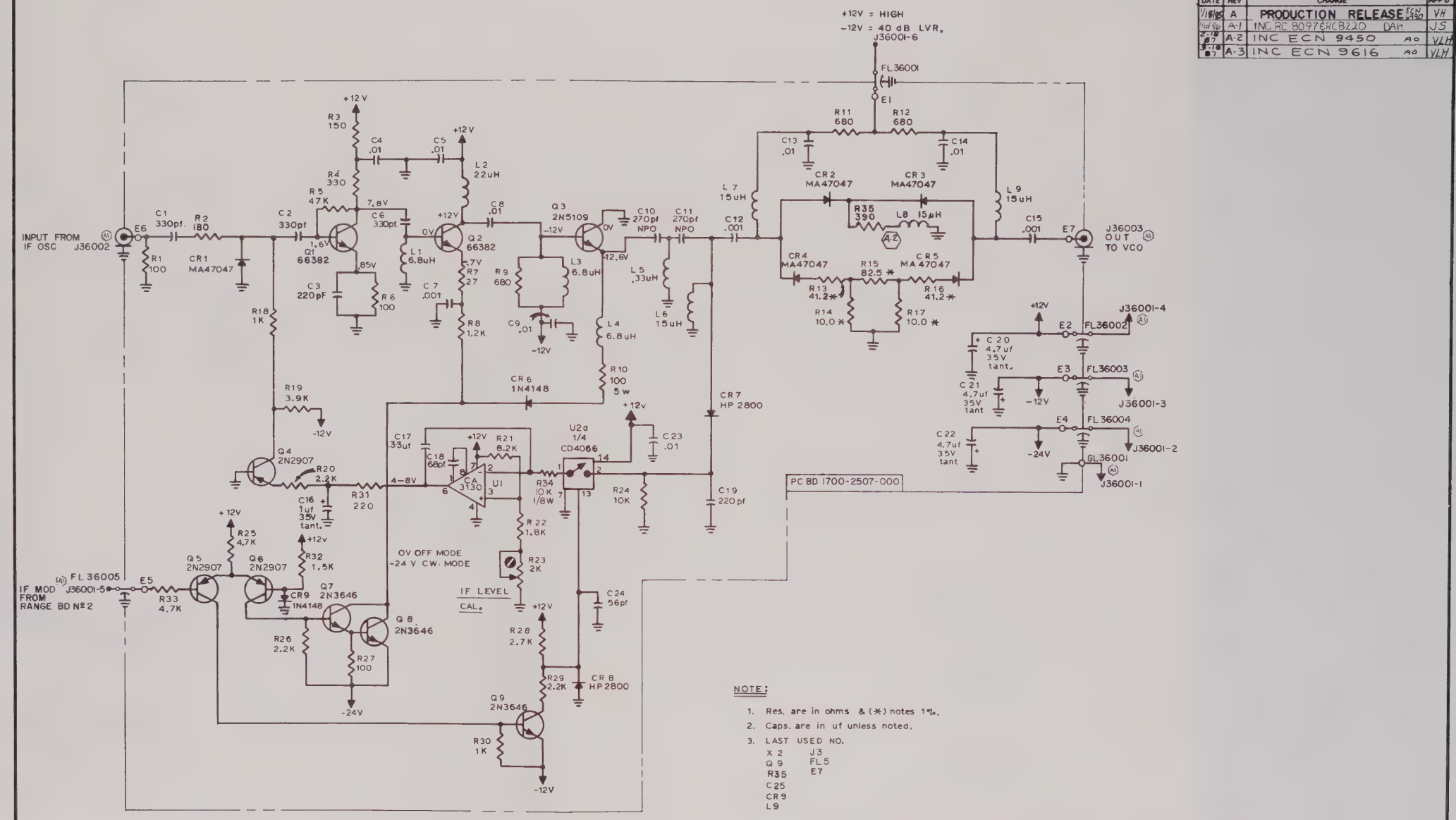

NOTE:

1. Res. are in ohms & (*) notes 1%.
2. Caps. are in uf unless noted.
3. LAST USED NO.
   X 2 J3
   Q 9 FL5
   R35 E7
   C25
   CR9
   L9
4. ALL COMPONENTS HAVE THE REFERENCE DESIGNATOR SERIES 36XXX (i.e. R1=R36001, C12=C36012, etc.).
5. ALL FEEDTHRU CAPACITORS ARE TO BE 1500pf UNLESS OTHERWISE SPECIFIED.
6. REF DES. NOT USED
   C25

DRAWN: L A Meis, Jr.	DATE: 02 Jan 85	TITLE: SCHEMATIC IF GEN POWER AMP RD 301	
CHECKED: VH	DATE: 1-3-85		
APPROVED: Carl Young	DATE: 1-3-85		
RELEASED	DATE	PART NO: 0000-4911-500	
MODEL: RD 301	SCALE:	SHEET 1 OF 1	REV: A 3

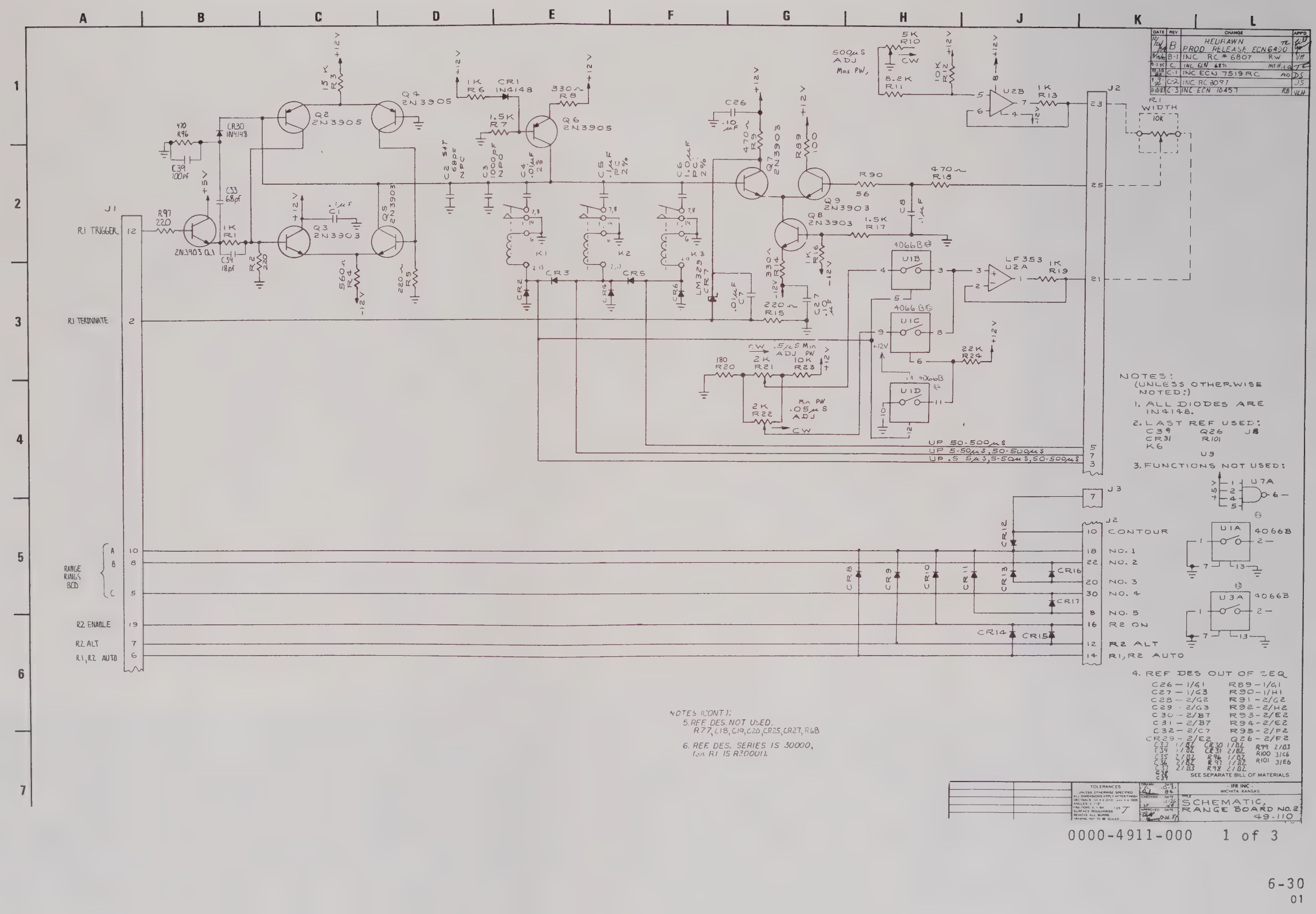

NOTES:
(UNLESS OTHERWISE NOTED:)

1. ALL DIODES ARE IN4148.
2. LAST REF USED:
   C39 Q26 J8
   CR31 R101
   K6 U9
3. FUNCTIONS NOT USED:
4. REF DES OUT OF SEQ
   C26 — 1/G1 R89 — 1/G1
   C27 — 1/G3 R90 — 1/H1
   C28 — 2/G2 R91 — 2/C2
   C29 — 2/G3 R98 — 2/H2
   C30 — 2/B7 R93 — 2/E2
   C31 — 2/B7 R94 — 2/E2
   C32 — 2/C7 R95 — 2/F2
   CR29 — 2/E2 Q26 — 2/F2
   C33 1/B2 CR30 1/B2 R99 2/B3
   C34 1/B2 CR31 2/B2 R100 3/C6
   C35 2/B2 R96 1/B2 R101 3/E6
   C36 2/B2 R97 1/B2
   C37 2/B3 R98 2/B2
   C38
   C39
   SEE SEPARATE BILL OF MATERIALS

NOTES (CONT):
5. REF DES NOT USED.
   R77, C18, C19, C20, CR25, CR27, R68
6. REF DES SERIES IS 30000, (ex R1 IS R30001).

DATE	REV	CHANGE	APPD
11/14/74	B	REDRAWN PROD RELEASE ECN 6420	
3/19/76	B-1	INC RC # 6807 RW	VH
9-15-76	C	INC ECN 6871 MTH	
12-15-76	C-1	INC ECN 7519 RC	AO
1-12-77	C-2	INC RC 3097	JS
11-28-77	C-3	INC ECN 10457	RB

IFR INC. WICHITA KANSAS
SCHEMATIC, RANGE BOARD NO. 2
49-110

0000-4911-000 1 of 3

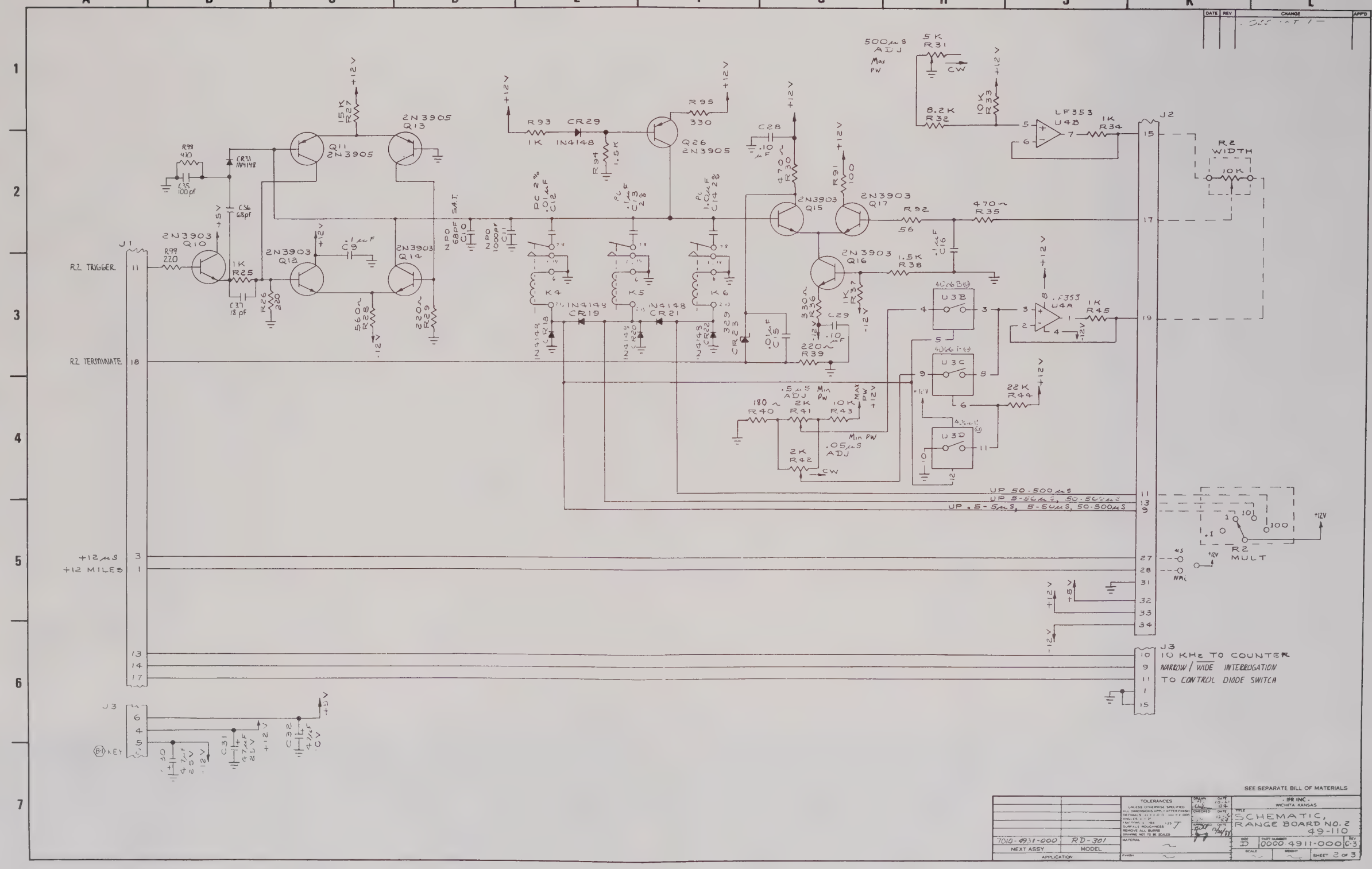
A B C D E F G H J K L
1 2 3 4 5 6 7
DATE REV CHANGE APP'D
R2 TRIGGER
R2 TERMINATE
+12μs
+12 MILES
J1
J2
J3
J3 10 KHz TO COUNTER
NARROW / WIDE INTERROGATION
TO CONTROL DIODE SWITCH
2N3905 Q1
2N3905 Q2
2N3905 Q3
2N3903 Q10
2N3903 Q12
2N3903 Q14
2N3903 Q15
2N3903 Q16
2N3903 Q17
2N3905 Q26
LF353 U4A
LF353 U4B
4066B U3B
4066B U3C
4066B U3D
IN4148 CR18
IN4148 CR19
IN4148 CR20
IN4148 CR21
IN4148 CR22
IN4148 CR23
IN4148 CR29
IN4148 CR31
R2 WIDTH
R2 MULT
500μs ADJ Max PW
.5μs Min PW ADJ
.05μs Min PW ADJ
UP 50-500μs
UP 5-50μs, 50-500μs
UP .5-5μs, 5-50μs, 50-500μs
SEE SEPARATE BILL OF MATERIALS
IFR INC. - WICHITA KANSAS
SCHEMATIC, RANGE BOARD NO. 2 49-110
7010-4931-000
RD-301
NEXT ASSY
MODEL
APPLICATION
SIZE D
PART NUMBER 0000-4911-000
REV C-3
SHEET 2 OF 3

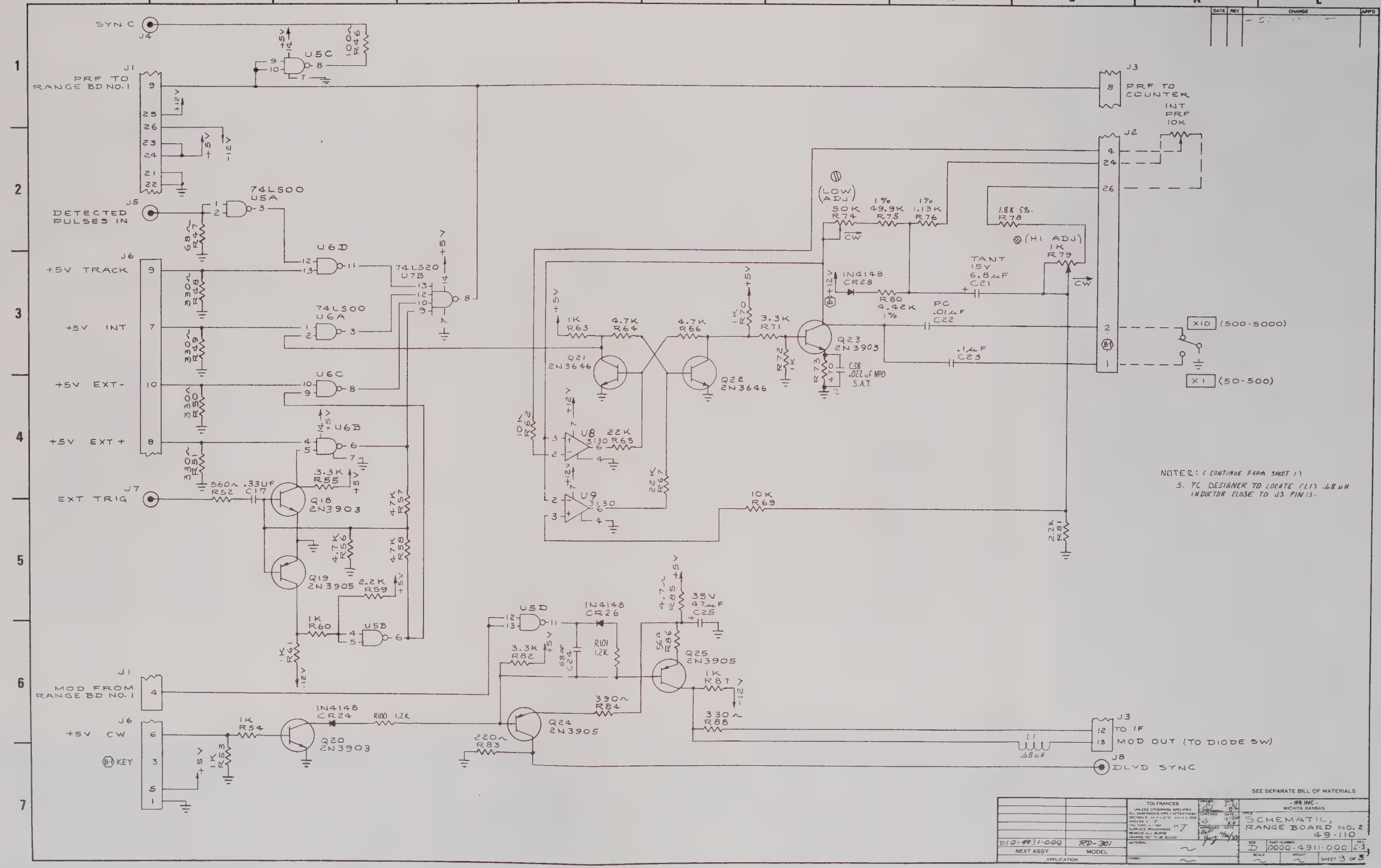
SYNC
J4
J1
PRF TO RANGE BD NO.1
J5
DETECTED PULSES IN
J6
+5V TRACK
+5V INT
+5V EXT-
+5V EXT+
J7
EXT TRIG
J1
MOD FROM RANGE BD NO.1
J6
+5V CW
KEY
J3
PRF TO COUNTER
J2
INT PRF 10K
X10 (500-5000)
X1 (50-500)
J3
TO IF
MOD OUT (TO DIODE SW)
J8
DLYD SYNC
NOTES: (CONTINUE FROM SHEET 1)
5. PC DESIGNER TO LOCATE (L1) .68uH INDUCTOR CLOSE TO J3 PIN 13.
SEE SEPARATE BILL OF MATERIALS
- IFR INC -
WICHITA KANSAS
SCHEMATIC, RANGE BOARD NO. 2
49-110
0000-4911-000
SHEET 3 OF 3
NEXT ASSY
MODEL
APPLICATION

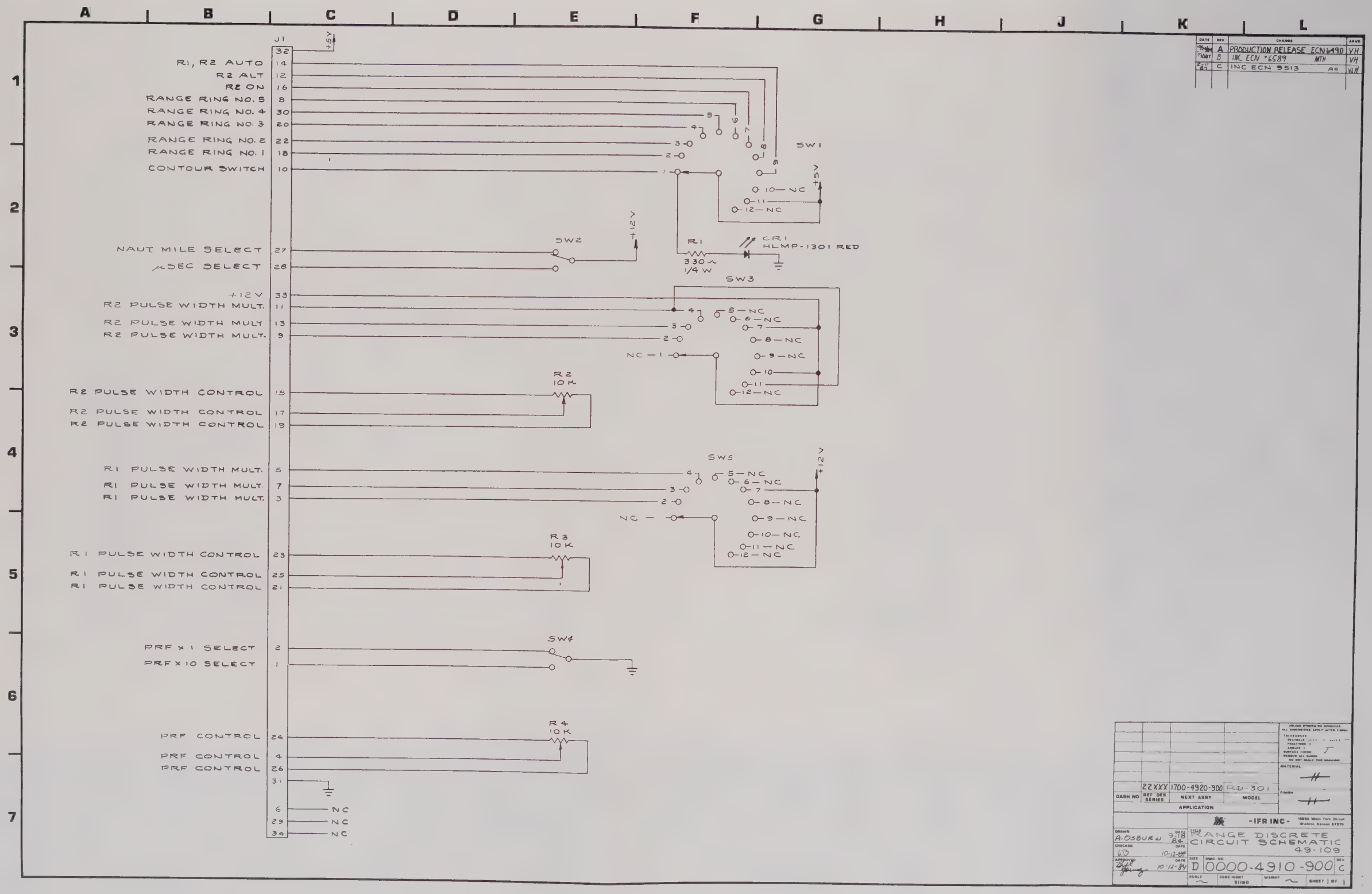

J1
+5V
R1, R2 AUTO
R2 ALT
R2 ON
RANGE RING NO. 5
RANGE RING NO. 4
RANGE RING NO. 3
RANGE RING NO. 2
RANGE RING NO. 1
CONTOUR SWITCH
SW1
NAUT MILE SELECT
μSEC SELECT
SW2
+12V
R1
330Ω
1/4 W
CR1
HLMP-1301 RED
SW3
+12V
R2 PULSE WIDTH MULT.
R2 PULSE WIDTH MULT
R2 PULSE WIDTH MULT.
R2 PULSE WIDTH CONTROL
R2 PULSE WIDTH CONTROL
R2 PULSE WIDTH CONTROL
R2
10K
R1 PULSE WIDTH MULT.
R1 PULSE WIDTH MULT.
R1 PULSE WIDTH MULT.
SW5
R1 PULSE WIDTH CONTROL
R1 PULSE WIDTH CONTROL
R1 PULSE WIDTH CONTROL
R3
10K
PRF x 1 SELECT
PRF x 10 SELECT
SW4
PRF CONTROL
PRF CONTROL
PRF CONTROL
R4
10K
NC
NC
NC
PRODUCTION RELEASE ECN 6490
INC ECN #6589
INC ECN 9513
22XXX
1700-4920-900
RD-301
DASH NO
REF DES SERIES
NEXT ASSY
MODEL
APPLICATION
-IFR INC-
RANGE DISCRETE CIRCUIT SCHEMATIC
49-109
A. OSBURN
10-12-84
D
0000-4910-900
C

DATE	REV	CHANGE	APVD
	B	PROD. REL. & ADVANCED BOARD TO "B" REV. PER FIRST BUILD ECN 8053	VLH
5-15-86	B-1	INC ECN 8521 JS	VLH
4-14-87	D	INC ECN 9238 & ADDENDUM "CHIPS"	VLH
7-6-87	D-1	INC ECN 9972 JS	VLH
1-7-88	E	INC RC 10161 "CHIPS"	VLH

5 R114 IS S.A.T. (SELECTED AT TEST)
NOMINAL VALUE: 150 ohm
RANGE VALUE: 100 - 180 ohm

6 R109 IS S.A.T. (SELECTED AT TEST)
NOMINAL VALUE: 100 ohm
RANGE VALUE: 82 - 180 ohm

7 PRINTED INDUCTOR SPECS

L16	.013 × .75 LG
L19	.013 × .75 LG
L31	.013 × .73 LG
L33	.013 × .67 LG
L37	.013 × 1.00 LG
L43	.013 × .73 LG
L51	.013 × .78 LG
(B) L54	.015 × .310 LG
(B) L55	.015 × .215 LG

(B) 8 C2, C3 & C7 ARE S.A.T. (SELECT AT TEST) COMPONENTS NOMINAL VALUE: 27pf
RANGE VALUE FOR: C2 15—100pf
C3 15—56pf
C7 15 82pf

STANDARDS:
(UNLESS OTHERWISE NOTED)

1. ALL REF. Nº'S CARRY AN ASSIGNED DESIGNATOR SERIES. THIS SCHEMATIC CARRIES SERIES 49XXX, (e.g., R1 IS R49001).
2. ALL RESISTORS ARE 1/8 W, 5%
3. ALL RESISTANCE IS EXPRESSED IN OHMS.
4. ALL CAPACITANCE IS EXPRESSED IN MICROFARADS.
5. ALL INDUCTANCE IS EXPRESSED IN MICRO-HENRYS.

NOTES:

(B) 1. LAST REF. DES. USED:

(D) C149	MXR3	E1
CR32	Q48	T1
J16	TP20	
K2	(D) R217	
L57	U22	

2. (D)

3. REF DES NOT USED:

J3	T2	C125	R130	R202
TP9	L47	C144	C133	R51
TP17	L48	C85	C91	R143
L21	R192	R135	Q23	TP19
C79	U6	R127	Q24	C88
C81	C124	R128	Q25	R121

4. FUNCTIONS NOT USED:

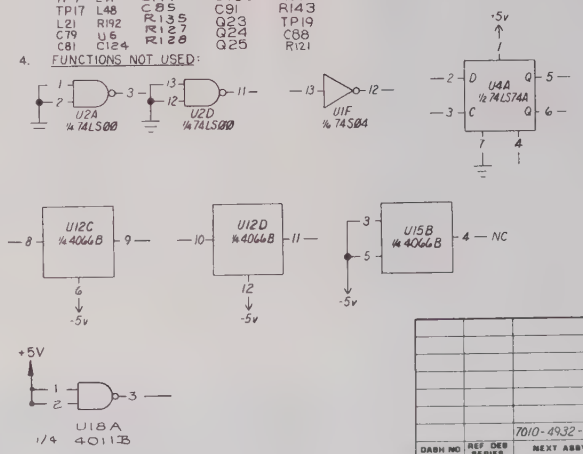

DASH NO	REF DES SERIES	NEXT ASSY	MODEL
		7010-4932-800	RD-301

APPLICATION

-IFR INC-

DRAWN L.A. Meis, dr. DATE 12 NOV 85
CHECKED Green Brook DATE 2-7-86
APPROVED [signature] DATE 5/5/86

TITLE SCHEMATIC DISCRIMINATOR Bd Nº1 RD301 (49-128)

SIZE D DWG NO 0000-4912-800 REV E

SCALE — CODE IDENT 51180 WEIGHT — SHEET 1 OF 5

(11)

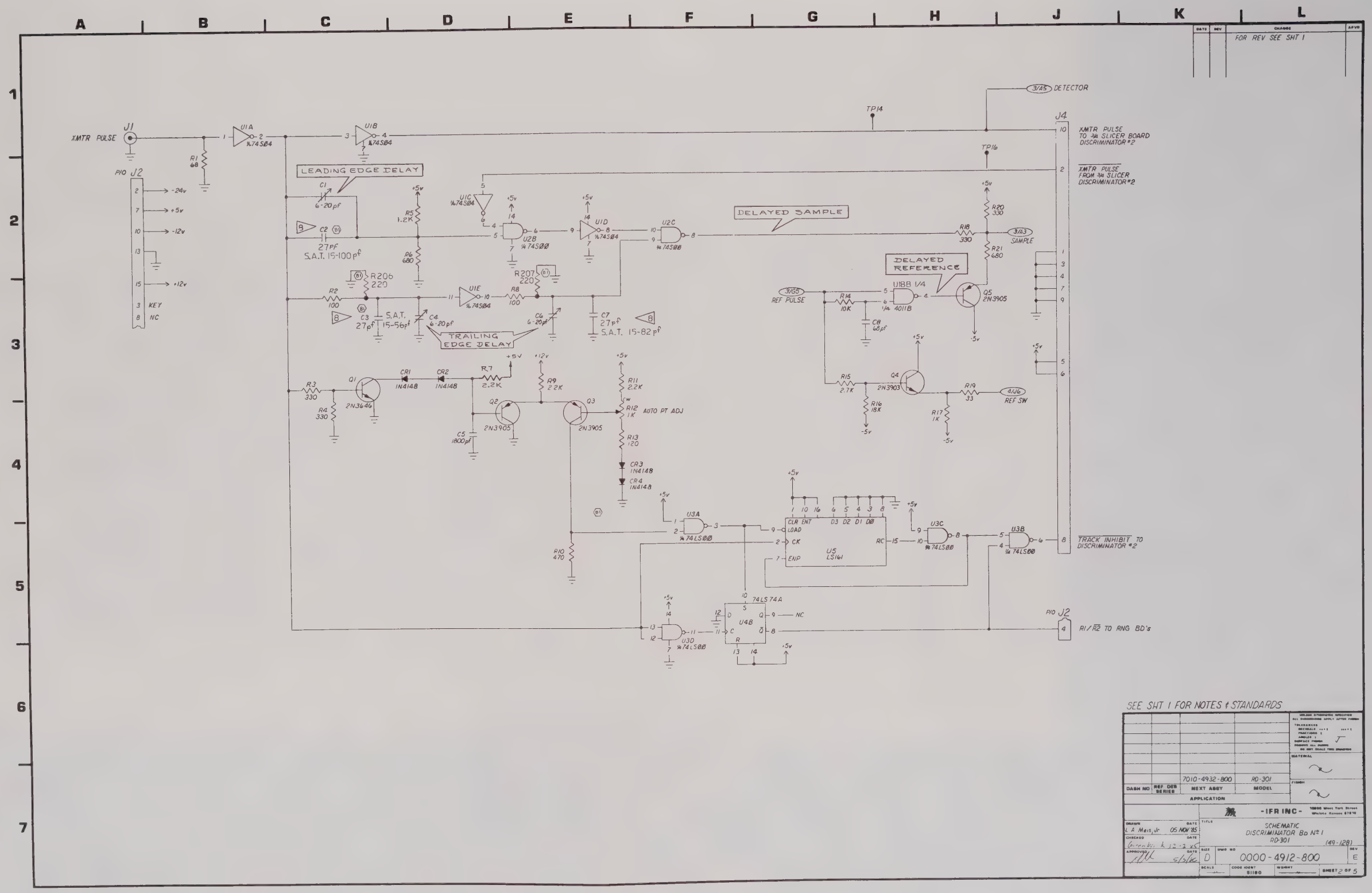
FOR REV SEE SHT 1
XMTR PULSE
J1
P10 J2
-24v
+5v
-12v
+12v
KEY
NC
U1A 1/4 74S04
U1B 1/4 74S04
R1 68
LEADING EDGE DELAY
C1 6-20pf
C2 27PF S.A.T. 15-100pf
R5 1.2K
R6 680
U1C 1/4 74S04
U2B 1/4 74S00
U1D 1/4 74S04
U2C 1/4 74S00
DELAYED SAMPLE
R206 220
R207 220
R2 100
R8 100
U1E 1/4 74S04
C3 27pf S.A.T. 15-56pf
C4 6-20pf
C6 6-20pf
C7 27pf S.A.T. 15-82pf
TRAILING EDGE DELAY
R3 330
R4 330
Q1 2N3646
CR1 1N4148
CR2 1N4148
R7 2.2K
R9 2.2K
Q2 2N3905
Q3 2N3905
C5 1800pf
R11 2.2K
R12 1K AUTO PT ADJ
R13 120
CR3 1N4148
CR4 1N4148
R10 470
U3A 1/4 74LS00
U5 LS161
CLR ENT LOAD CK ENP
D3 D2 D1 D0
RC
U3C 1/4 74LS00
U3B 1/4 74LS00
U3D 1/4 74LS00
74LS74A
U4B
NC
TP14
TP16
3/45 DETECTOR
J4
XMTR PULSE TO 3/4 SLICER BOARD DISCRIMINATOR #2
XMTR PULSE FROM 3/4 SLICER DISCRIMINATOR #2
R18 330
R20 330
R21 680
3/43 SAMPLE
DELAYED REFERENCE
U18B 1/4 4011B
Q5 2N3905
3/G5 REF PULSE
R14 10K
C8 68pf
R15 2.7K
R16 18K
Q4 2N3903
R17 1K
R19 33
4/J6 REF SW
TRACK INHIBIT TO DISCRIMINATOR #2
P10 J2
R1/R2 TO RNG BD's
SEE SHT 1 FOR NOTES & STANDARDS
7010-4932-800
RD-301
DASH NO
REF DES SERIES
NEXT ASSY
MODEL
APPLICATION
-IFR INC-
DRAWN L A Meis, Jr 05 NOV '85
CHECKED
APPROVED
TITLE SCHEMATIC DISCRIMINATOR Bd No 1 RD-301
(49-128)
SIZE D
DWG NO 0000-4912-800
REV E
SCALE
CODE IDENT 51180
WEIGHT
SHEET 2 OF 5

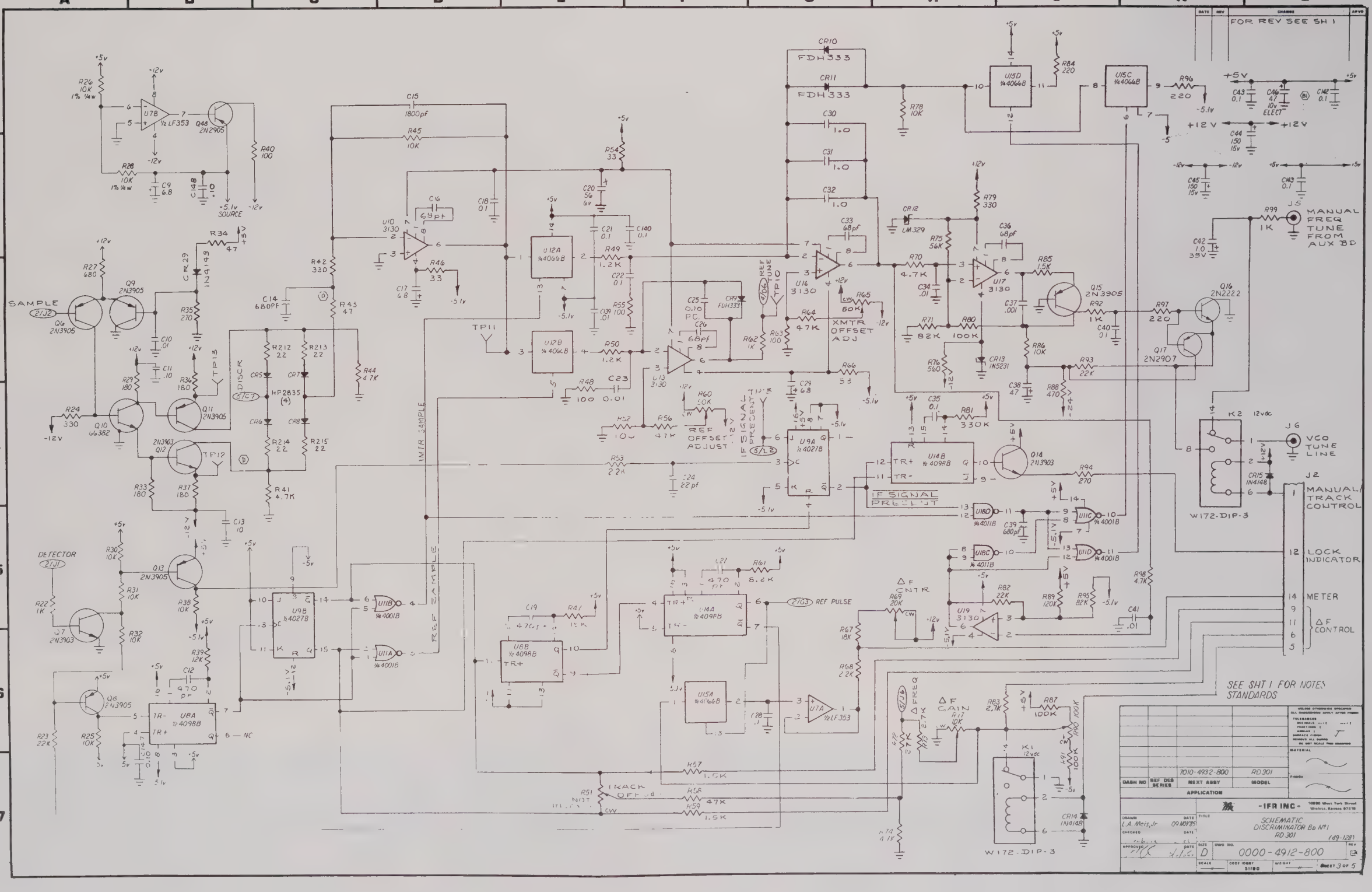
FOR REV SEE SH 1
SAMPLE
DETECTOR
MANUAL FREQ TUNE FROM AUX BD
VCO TUNE LINE
MANUAL/TRACK CONTROL
LOCK INDICATOR
METER
ΔF CONTROL
XMTR OFFSET ADJ
REF OFFSET ADJUST
IF SIGNAL PRESENT
REF PULSE
ΔF CNTR
ΔF GAIN
TRACK OFFSET
SEE SHT 1 FOR NOTES STANDARDS
7010-4932-800
RD301
NEXT ASSY
MODEL
APPLICATION
-IFR INC-
SCHEMATIC DISCRIMINATOR Bd No 1 RD301
L.A. Meis, Jr
0000-4912-800
SHEET 3 OF 5

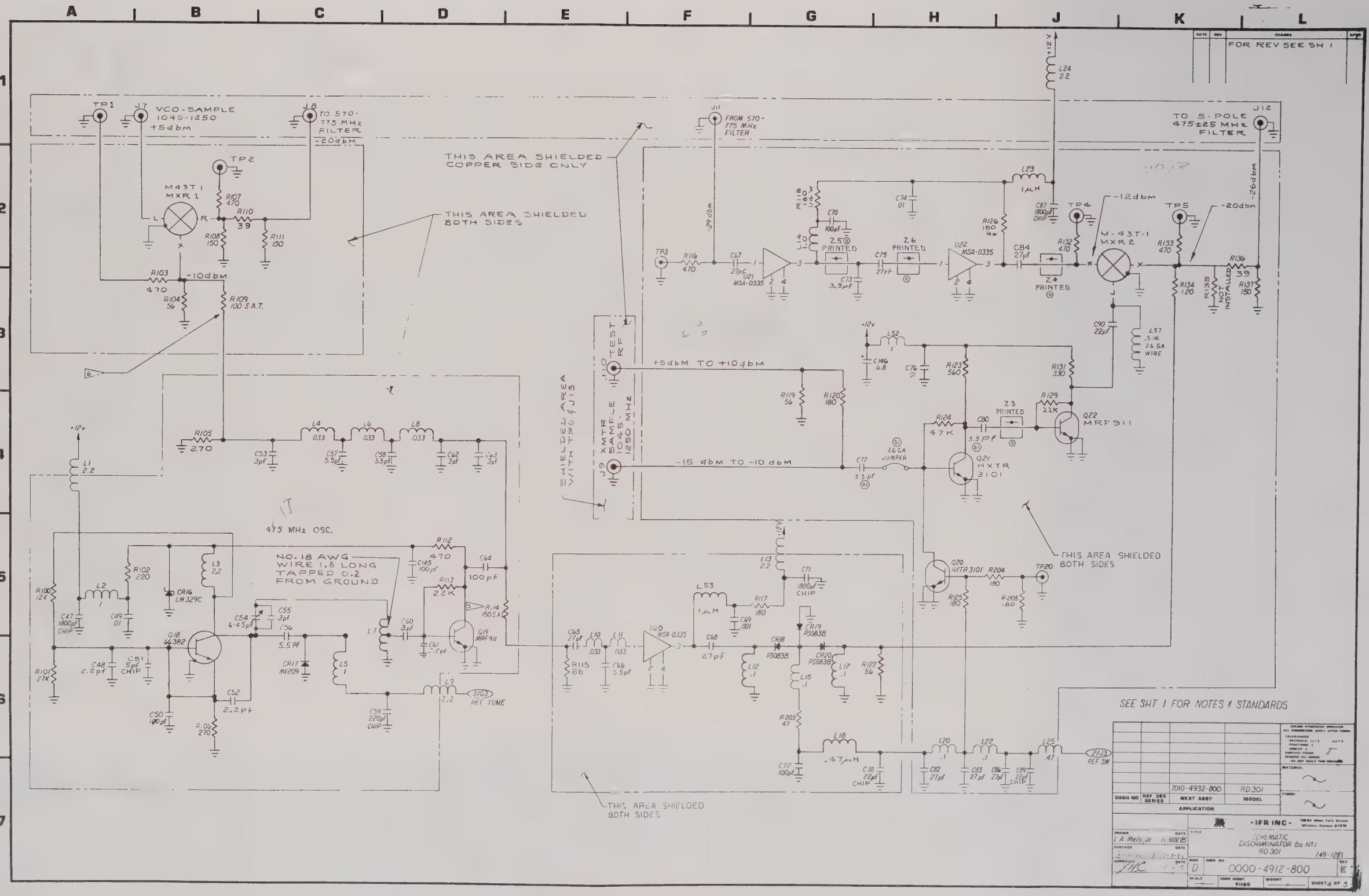
FOR REV SEE SH 1
VCO-SAMPLE 1045-1250 +5dbm
TO 570-775 MHz FILTER -20dbm
FROM 570-775 MHz FILTER
TO 5-POLE 475±25 MHz FILTER
THIS AREA SHIELDED COPPER SIDE ONLY
THIS AREA SHIELDED BOTH SIDES
M43T1 MXR1
M-43T-1 MXR2
-10dbm
-12dbm
-20dbm
-26dbm
R109 100 S.A.T.
TEST RF
XMTR SAMPLE 1045-1250 MHz
+5dbm TO +10dbm
-15 dbm TO -10 dbm
SHIELDED AREA WITH TP6 & J13
475 MHz OSC.
NO. 18 AWG WIRE 1.8 LONG TAPPED 0.2 FROM GROUND
REF TUNE
REF SW
THIS AREA SHIELDED BOTH SIDES
THIS AREA SHIELDED BOTH SIDES
SEE SHT 1 FOR NOTES & STANDARDS
7010-4932-800
RD301
NEXT ASSY
MODEL
APPLICATION
-IFR INC-
SCHEMATIC DISCRIMINATOR Bd No 1 RD301
149-1281
0000-4912-800
SHEET 4 OF 5

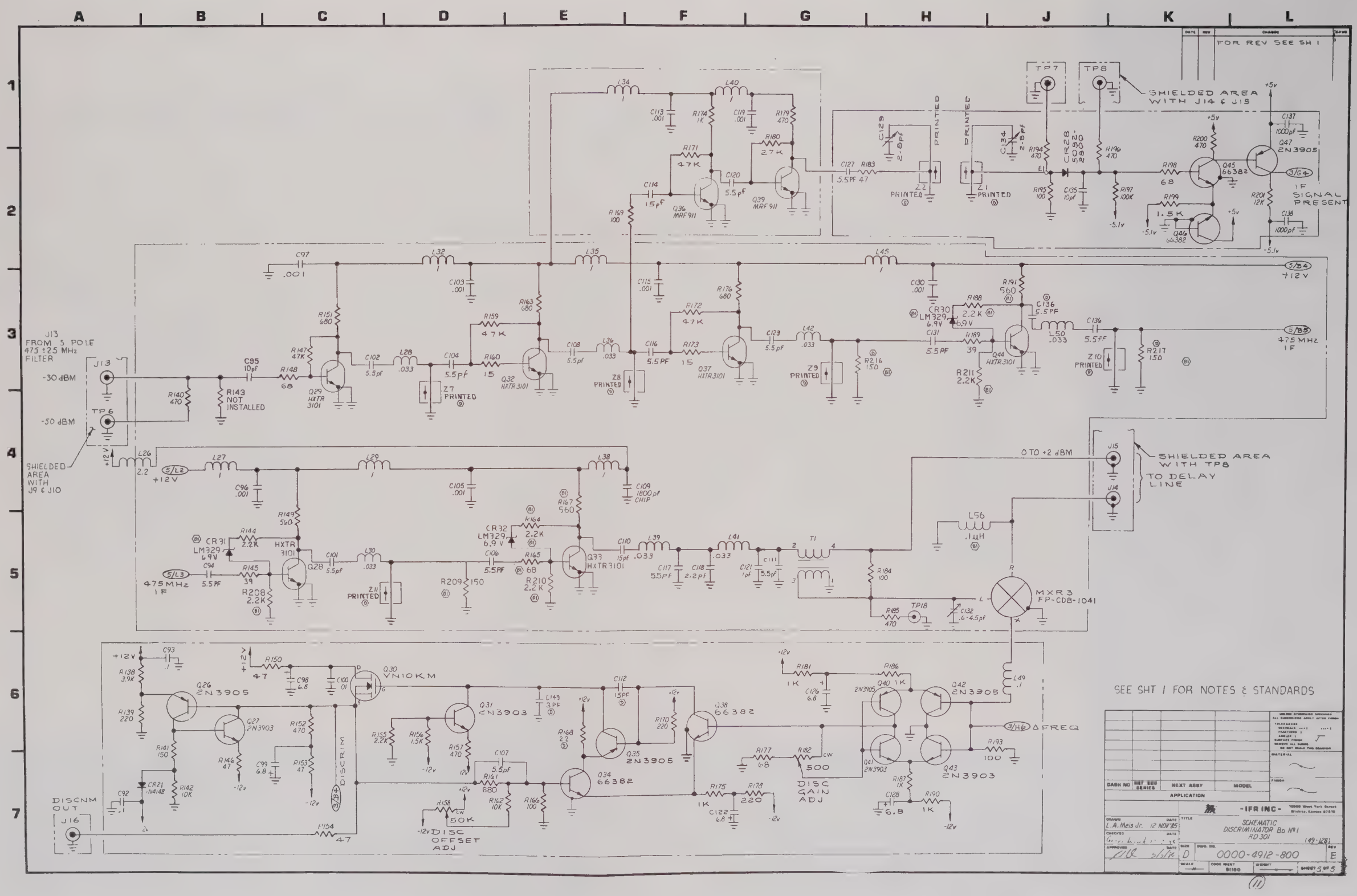
FOR REV SEE SH 1
SHIELDED AREA WITH J14 & J15
IF SIGNAL PRESENT
J13 FROM 5 POLE 475 ±25 MHz FILTER
-30 dBM
-50 dBM
SHIELDED AREA WITH J9 & J10
475 MHz IF
0 TO +2 dBM
SHIELDED AREA WITH TP8
TO DELAY LINE
MXR3 FP-CDB-1041
DISCNM OUT
DISCRIM
DISC OFFSET ADJ
DISC GAIN ADJ
SEE SHT 1 FOR NOTES & STANDARDS
-IFR INC-
SCHEMATIC DISCRIMINATOR Bo No 1 RD 301
0000-4912-800

DATE	REV	CHANGE	APVD
9/27/84	B	REVISED & REDRAWN	[illegible]
10/22/84	B	PRODUCTION RELEASE ECN 6459	[illegible]
10/1/85	B-1	INC. RC 7743 VLH	SLR

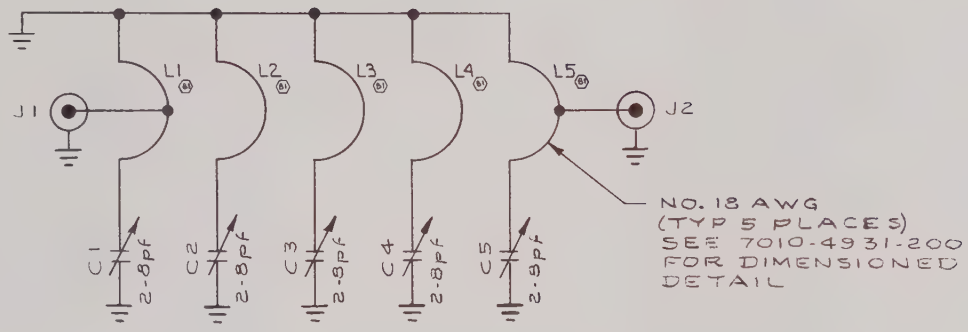

DASH NO	REF DES SERIES	NEXT ASSY	MODEL
	40XXX	1700-4921-200	RD-301

APPLICATION

UNLESS OTHERWISE SPECIFIED ALL DIMENSIONS APPLY AFTER FINISH
TOLERANCES
DECIMALS .xx ± .xxx ±
FRACTIONS ±
ANGLES ±
SURFACE FINISH √
REMOVE ALL BURRS
DO NOT SCALE THIS DRAWING

MATERIAL ~

FINISH ~

-IFR INC- 10200 West York Street Wichita, Kansas 67215

DRAWN A Coleman DATE 9-5-84
CHECKED [illegible] DATE 9-27-84
APPROVED [illegible] DATE 9-27-84

TITLE 475 MHz FILTER CIRCUIT SCHEMATIC 49-112

SIZE C | DWG. NO. 0000-4911-200 | REV B-1

SCALE ~ | CODE IDENT. 51190 | WEIGHT ~ | SHEET 1 OF 1

DATE	REV	CHANGE	APVD
	B	See sht 1 for rev record	

⑧ 1/8 WIDTH COUNTER (↓)

⑧ PRESET 1/F3

⑧ 7/8 WIDTH COUNTER (↓)

⑧ 1/4 74S00

DASH NO	REF DES SERIES	NEXT ASSY	MODEL
-300	35XXX	7010-4931-300	RD-301

APPLICATION

UNLESS OTHERWISE SPECIFIED ALL DIMENSIONS APPLY AFTER FINISH. TOLERANCES DECIMALS .xx ± .xxx ± FRACTIONS ± ANGLES ± SURFACE FINISH REMOVE ALL BURRS DO NOT SCALE THIS DRAWING

MATERIAL

FINISH

-IFR INC- 10800 West York Street Wichita, Kansas 67215

DRAWN	DATE	TITLE
CS BUELL	6-11-84	DISCRIMINATOR CIRCUIT SCHEMATIC BOARD NO. 2 (49-113)
CHECKED	DATE	
KD	12-3-84	
APPROVED	DATE	SIZE D; DWG NO 0000-4911-300; REV B-1
Bill Young	12-3-84	SCALE —; CODE IDENT 31180; WEIGHT —; SHEET 2 OF 2

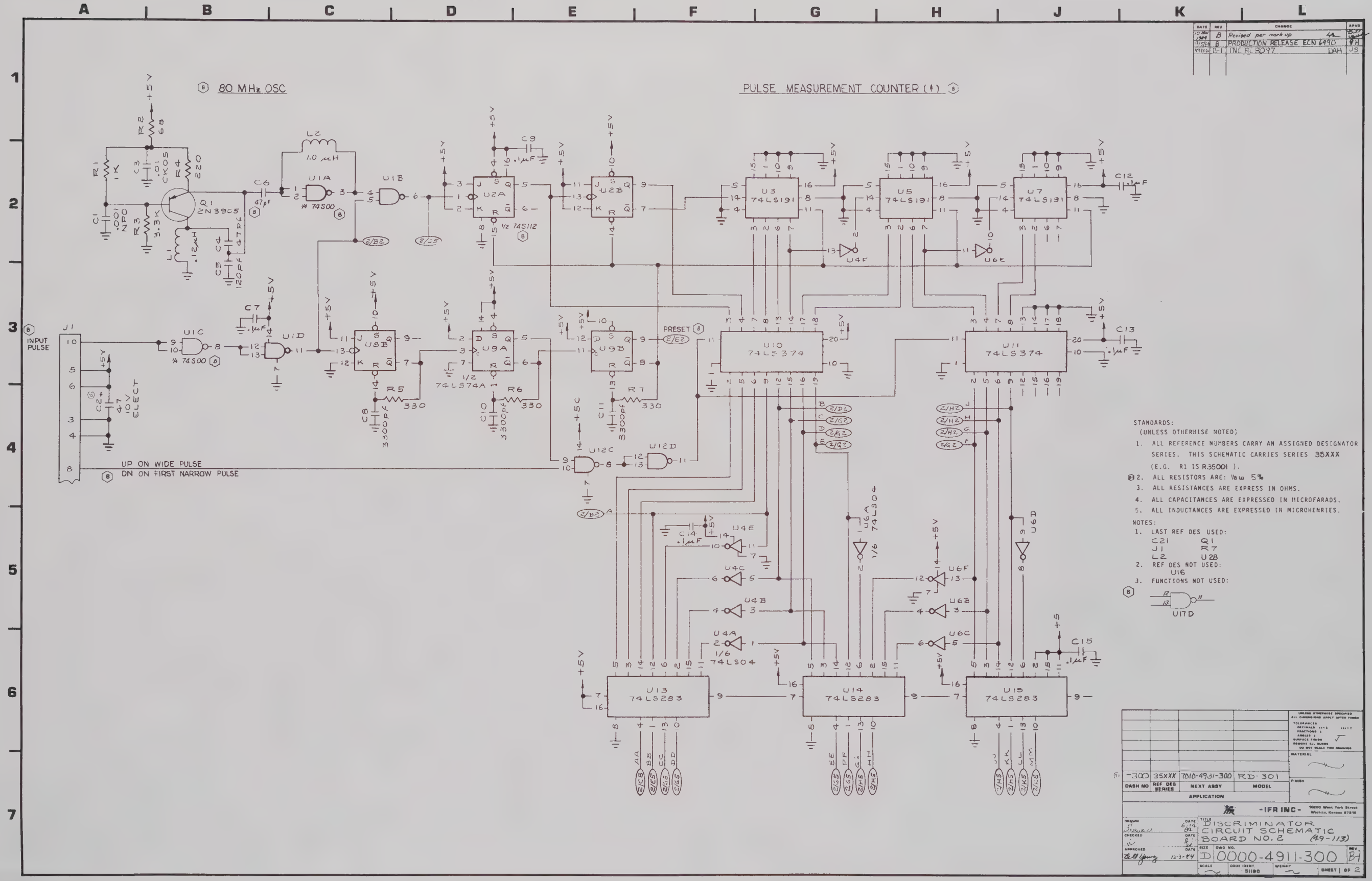

80 MHz OSC
PULSE MEASUREMENT COUNTER (↑)
INPUT PULSE
UP ON WIDE PULSE
DN ON FIRST NARROW PULSE
PRESET
Q1 2N3905
U1A 1/4 74S00
U1B
U1C 1/4 74S00
U1D
U2A 1/2 74S112
U2B
U3 74LS191
U5 74LS191
U7 74LS191
U8B
U9A 1/2 74LS74A
U9B
U10 74LS374
U11 74LS374
U12C
U12D
U4A 1/6 74LS04
U4B
U4C
U4E
U4F
U6A 1/6 74LS04
U6B
U6C
U6D
U6E
U6F
U13 74LS283
U14 74LS283
U15 74LS283
U17D
STANDARDS:
(UNLESS OTHERWISE NOTED)
1. ALL REFERENCE NUMBERS CARRY AN ASSIGNED DESIGNATOR SERIES. THIS SCHEMATIC CARRIES SERIES 35XXX (E.G. R1 IS R35001).
2. ALL RESISTORS ARE: 1/8 w 5%
3. ALL RESISTANCES ARE EXPRESS IN OHMS.
4. ALL CAPACITANCES ARE EXPRESSED IN MICROFARADS.
5. ALL INDUCTANCES ARE EXPRESSED IN MICROHENRIES.
NOTES:
1. LAST REF DES USED:
C21 Q1
J1 R7
L2 U28
2. REF DES NOT USED:
U16
3. FUNCTIONS NOT USED:
-300 35XXX 7010-4931-300 RD-301
DASH NO REF DES SERIES NEXT ASSY MODEL
APPLICATION
-IFR INC-
DISCRIMINATOR CIRCUIT SCHEMATIC BOARD NO. 2 (49-113)
D 0000-4911-300 B-1
SHEET 1 OF 2

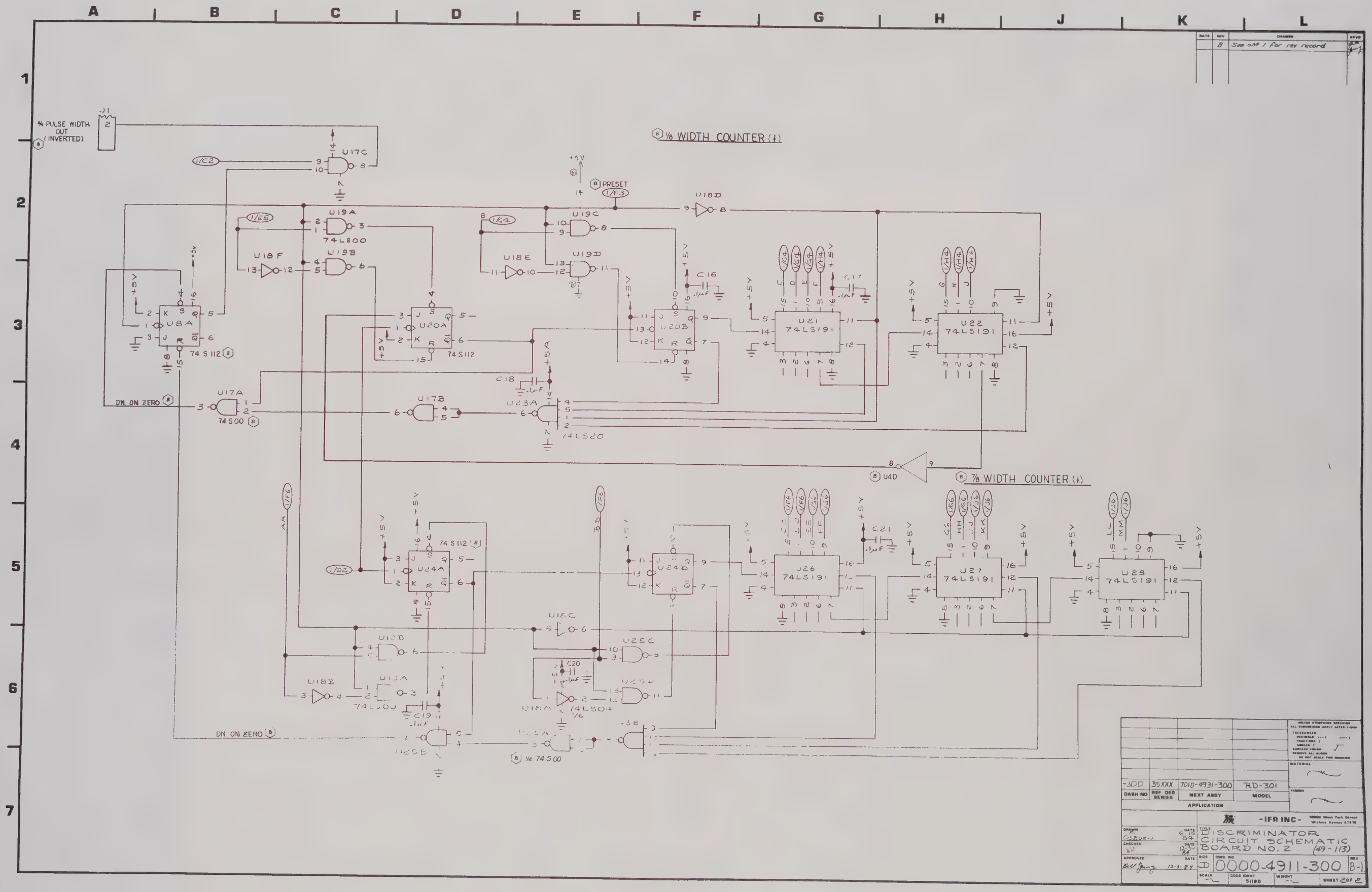

DATE	REV	CHANGE	APVD
	B	See sht 1 for rev record	

DASH NO	REF DES SERIES	NEXT ASSY	MODEL
-300	35XXX	7010-4931-300	RD-301

APPLICATION

UNLESS OTHERWISE SPECIFIED ALL DIMENSIONS APPLY AFTER FINISH
TOLERANCES
DECIMALS ±.1 ±.2
FRACTIONS ±
ANGLES ±
SURFACE FINISH
REMOVE ALL BURRS
DO NOT SCALE THIS DRAWING

MATERIAL

FINISH

-IFR INC- 10800 West York Street Wichita Kansas 67215

DRAWN: R. Osburn DATE: 6-14-84
CHECKED: WP DATE: 12-3-84
APPROVED: Bill Young DATE: 12-3-84

TITLE: DISCRIMINATOR CIRCUIT SCHEMATIC BOARD NO. 2 (49-113)

SIZE: D DWG. NO. 0000-4911-300 REV B-1

SCALE ~ CODE IDENT. 51180 WEIGHT ~ SHEET 2 OF 2

7-1 BILLS OF MATERIALS

The Bills of Materials in this section are collated in assembly number sequence. Each bill is then listed in Reference Designator order and has its own page number series. Individual line items provide the IFR part number and the item description for the purpose of ordering parts.

7-2 INDEX OF BILLS OF MATERIALS

ASSY. NO.	TITLE	PAGE
7003-4940-000	COMPOSITE	7-3, 7-4
7005-4940-100	FRONT PANEL	7-5, 7-6
7005-4940-200	REAR PANEL	7-7, 7-8
7005-4940-400	COUNTER, DISPLAY	7-9
7005-4940-600	CARD FRAME	7-9
7005-4940-800	DELAY LINE	7-10
7005-4940-900	MAIN DIODE SWITCH	7-10
7005-4941-300	FLOOR ASSY	7-11
7005-4942-400	VCO #2	7-12 thru 7-16
7010-0016-000	POWER SUPPLY, 170 VDC	7-17
7010-2517-800	COUNTER, DISPLAY	7-17
7010-2518-000	COUNTER GATING	7-18
7010-4930-000	MAIN DIODE SWITCH	7-19
7010-4930-100	DETECTOR BUFFER - POWER CIRCUIT	7-20, 7-21
7010-4930-300	RANGE BD. #1	7-22 thru 7-25
7010-4930-500	PRESCALER	7-26, 7-27
7010-4930-700	RF MODE SWITCH	7-28
7010-4930-800	RANGE DIGITIZER SWITCH	7-28
7010-4930-900	RANGE DISCRETE	7-28
7010-4931-000	RANGE BD. #2	7-29 thru 7-33
7010-4931-100	FILTER, 570-800 MHz	7-34
7010-4931-200	FILTER, 475 MHz	7-34

ASSY. NO.	TITLE	PAGE
7010-4931-300	DISCRIMINATOR BD #2	7-35, 7-36
7010-4931-400	IF & MARKER OSCILLATORS	7-37 thru 7-39
7010-4931-500	IF GENERATOR POWER AMP	7-40 thru 7-42
7010-4931-600	COUNTER LOGIC	7-43, 7-44
7010-4931-700	MODULATION MODE SWITCH	7-45
7010-4932-700	AGC	7-46 thru 7-48
7010-4932-800	DISCRIMINATOR BD #1	7-49 thru 7-59
7002-4941-500	FINAL ASSEMBLY (NOT ILLUSTRATED)	7-60

ASSY NO.	REVISION	DESCRIPTION	LAST ECN	DATE INC
7003-4940-000	U	COMPOSITE ASSY,RD-301	9572	02/19/87

STAT	REF.DES.	QTY	COMP. PART NO.	DESCRIPTION	
ACT		.00	DWG-0000-4912-000	DWG SCHEM,INTERCONNECT DIAGRAM	
ACT	*01	1.00	1400-4953-300	BRACKET,LATCH GUIDE	
ACT	*02	2.00	1400-4980-100	BRKT,LEFT FRONT PANEL MOUNTING	
ACT	*03	2.00	1400-4980-101	BRKT,RIGHT FRONT PANEL MOUNT	
ACT	*04	1.00	1400-4985-300	BRKT,SUPT,CARD FRAME,RIGHT	
ACT	*05	1.00	1400-4985-301	BRKT,SUPT,CARD FRAME,LEFT	
ACT	*06	2.00	1407-7632-700	HANDLE EXTRUSION	
ACT	*07	2.00	1415-7627-500	SIDE FRAME	
ACT	*08	4.00	1421-1424-201	FOOT MOUNTING	2
ACT	*10	2.00	2410-4950-200	BAR,TRIM,FRONT PANEL	
ACT	*11	1.00	2506-4953-400	PLATE,CARD RACK LATCH GUIDE	
ACT	*12	1.00	2800-4954-200	SPACER,LATCH CARD FRAME	
ACT	*13	2.00	2803-0188-006	SCREW,4-40 X 3/16 PPHM	
ACT	*14	28.00	2803-0375-003	SCREW,4-40 X 3/8 PFHM	
ACT	*15	8.00	2804-0250-006	SCREW,6-32 X 1/4 PPHM	
ACT	*16	14.00	2804-0313-003	SCREW 6-32 X 5/16 PFHMS	
ACT	*17	4.00	2805-0250-006	SCREW 8-32X1/4 PBHMS	
ACT	*18	8.00	2805-0375-003	SCREW 8-32 X 3/8 PFHMS	
ACT	*19	2.00	2832-2504-800	HINGE PIVOT	1
ACT	*20	4.00	2840-0000-008	WASHER,FLAT,4,AN960-C4	
ACT	*23	8.00	2850-0000-001	SPEED NUT TIMMERMAN C11351632	
ACT	*24	1.00	6042-4980-300	COAX ASSY,SR.086,RLY--DIODE SW	
ACT	*25	1.00	6042-4980-400	COAX ASSY,SR.086,RELAY--ATTEN	
ACT	*26	1.00	6042-4980-500	COAX ASSY,SR.086,DIO SW*X-BAND	
ACT	*28	1.00	6042-4980-800	COAX ASSY,SR.141,X-BAND--R PNL	
ACT	*29	1.00	6042-4980-900	COAX ASSY,SR.141,X-BAND--F PNL	
ACT	*32	1.00	6042-4982-200	COAX ASSY,SR.086,ATTEN*ATTEN	
ACT	*35	1.00	6042-4983-800	COAX ASSY,SR.086,X-BAND--ATTEN	
ACT	*37	1.00	6042-4983-900	COAX ASSY,SR.086,DSCM-PRESC.	
ACT	*38	1.00	6045-4981-200	RBN CA ASSY,RANGE--DIGIT SW	
ACT	*39	1.00	6045-4981-300	RBN CA ASSY,RANGE--DISCRETE SW	
ACT	*55	1.00	7005-4940-100	MECH ASSY,FRONT PANEL RD-301	
ACT	*56	1.00	7005-4940-200	MECH ASSY,REAR PANEL RD-301	
ACT	*58	1.00	7005-4940-400	MECH ASSY,DISPLAY COUNTER	
ACT	*59	1.00	7005-4940-600	MECH ASSY,CARD FRAME	
ACT	*61	4.00	2805-0375-006	SCREW 8-32X3/8 PHIL BIND HD	
ACT	*62	2.00	1407-7632-400	HANDLE ASSY	2
ACT	*63	1.00	1414-7606-501	COVER,TOP	
ACT	*64	1.00	1414-7606-601	COVER,BOTTOM,7IN RACK MNT CASE	
ACT	*65	2.00	1414-7612-101	SIDE COVER	
ACT	*66	5.00	1421-7630-200	FOOT ASSY	2 *ASY
ACT	*67	2.00	2400-7607-001	DECAL TRIM STRIP	
ACT	*68	2.00	2506-7606-900	PLATE,HANDLE MTG,PAINTED	
ACT	*69	12.00	2804-0250-003	SCREW 6-32X1/4 PFHMS	
ACT	*70	8.00	2804-0500-003	SCREW,6-32 X 1/2 PFHM	
ACT	*72	5.00	2803-0500-006	SCREW,4-40 X 1/2 PPHM	
ACT	*73	4.00	2840-0000-003	WASHER,LOCK,INT TOOTH,4	
ACT	*74	6.00	2803-0250-006	SCREW,4-40 X 1/4 PPHM	
ACT	*75	1.00	7010-4931-400	PCB ASSY,IF MKR/OSC,RD-301	
ACT	*76	1.00	7010-4931-500	PCB ASSY,IF GEN PWR AMP,RD-301	
ACT	*77	1.00	7010-4930-500	PCB ASSY,PRESCALER	
ACT	*78	1.00	6042-4985-500	COAX ASSY,X-BND AUX OUT/R PNL	

ASSY NO.	REVISION	DESCRIPTION	LAST ECN	DATE INC
7003-4940-000	W	COMPOSITE ASSY,RD-301	9572	02/19/87

STAT	REF.DES.	QTY	COMP. PART NO.	DESCRIPTION
ACT	*79	2.00	5650-0010-200	TERMINATION,M SMA,50 OHM,1.15
ACT	*80	8.00	2840-0000-001	WASHER,LOCK,INT TOOTH,6
ACT	*81	1.00	2525-4952-000	GASKET,RF,FLOOR MODULES
ACT	*88	1.00	7005-4941-300	MECH ASSY-FLOOR
ACT	*89	1.00	7009-4940-000	FLEX COAX KIT RD-301
ACT	*90	1.00	2840-7600-214	WASHER,ALUM,.870D,.6301D,.030T
ACT	AT49001	1.00	2901-0105-006	ATTEN, 6DB, 1W,SMA, 2.0GHZ

ASSY NO	REVISION	DESCRIPTION	LAST ECN	DATE INC
7005-4940-100	D	MECH ASSY,FRONT PANEL RD-301	8097	12/13/85

STAT	REF DES	QTY	COMP PART NO.	DESCRIPTION
ACT		5.30	6003-0000-001	WIRE,HOOK,TFE,26GA, 7S,BLACK
ACT		1.90	6003-0000-003	WIRE,HOOK,TFE,26GA, 7S,RED
ACT		.17	6003-0000-008	WIRE,HOOK,TFE,26GA, 7S,VIOLET
ACT		1.16	6003-0000-010	WIRE,HOOK,TFE,26GA, 7S,WHITE
ACT		3.42	6003-0000-018	WIRE,HOOK,TFE,26GA, 7S,WHT/VIO
ACT		3.33	6003-0000-019	WIRE,HOOK,TFE,26GA, 7S,WHT/GRY
ACT		00	DUG-0000-4911-800	DUG SCHEM,FRONT PANEL
ACT	*01	1.00	1405-4950-700	PANEL,RD-301 FRONT STRUCTURAL
ACT	*02	1.00	1414-4982-500	COVER,DISPLAY
ACT	*03	2.00	2402-0921-900	KNOB,RND, .4380D,.1281D, 520LG
ACT	*04	1.00	1400-4951-400	BRKT,METER MOUNTING
ACT	*05	1.00	2402-4984-900	KNOB ASSY,PRF
ACT	*06	1.00	7010-4930-900	PCB ASSY,RANGE DISCRETE
ACT	*07	1.00	7010-4930-800	PCB ASSY, RANGE DIGIT SWITCH
ACT	*08	3.00	2402-0013-300	KNOB 1
ACT	*09	2.00	2402-4984-800	KNOB ASSY, PULSE WIDTH
ACT	*10	2.00	2800-7600-168	SPACER,AL, .25HEX,4-40ID, .75 LG
ACT	*11	1.00	7010-4931-700	PCB ASSY,MOD MODE SWITCH
ACT	*12	1.00	2401-2501-200	DIAL 2 *ASY
ACT	*13	1.00	2402-0922-000	KNOB,DUAL, .6200D, .2521D, .460LG
ACT	*14	1.00	7010-4930-700	PCB ASSY,R.F. MODE SWITCH
ACT	*15	1.00	2402-0005-703	KNOB 1
ACT	*16	1.00	2402-4985-000	KNOB ASSY,10DB STEPPED ATTEN
ACT	*17	1.00	2401-2526-400	DIAL *ASY
ACT	*18	9.00	4503-4953-800	RETAINER,LEXAN-ADHESIVE,LED
ACT	*19	1.00	2403-4950-000	OVERLAY,RD-301 FRONT PANEL
ACT	*20	2.00	2800-7600-114	SPACER,AL, .500OD, .375ID, .000LG
ACT	*21	4.00	2850-0000-020	NUT,HEX,SMALL PAT,4-40
ACT	*22	2.00	2803-0375-006	SCREW,4-40 X 3/8 PPHM
ACT	*23	4.00	2803-0500-006	SCREW,4-40 X 1/2 PPHM
ACT	*24	8.00	2804-0250-003	SCREW 6-32X1/4 PFHMS
ACT	*25	3.00	2850-0000-077	NUT,HEX,1/4 X 28,5/16F,1/8 THK
ACT	*26	10.00	2840-7600-208	WASHER,ALUM, .380D, .250ID, .020T
ACT	*27	3.00	2840-7600-205	WASHER,ALUM, .500D, .375ID, 020T
ACT	*28	5.00	2850-0000-081	NUT,TOG SW DRESS.35D,1/4-40ID
ACT	*29	26.00	2803-0125-001	SCREW,4-40 X 1/8 SHS
ACT	*30	2.00	2850-7601-301	SCREW, .188L4-40.19HH,4-40X 300
ACT	*31	7.00	2840-0000-003	WASHER,LOCK,INT TOOTH,4
ACT	*32	4.00	2840-0000-004	WASHER,LOCK,INT TOOTH,2
ACT	*33	4.00	2850-0000-012	NUT,HEX,SMALL PAT,2-56
ACT	*34	4.00	2850-0000-046	NUT,HEX,EX SM PAT,1/4_32
ACT	*36	2.00	2800-3065-300	SPACER,AL, .320OD, .260ID, 062LG
ACT	*37	1.00	2850-0000-014	LUG,GND,4
ACT	*38	1.00	2840-0000-019	3/8 FLAT WASHER
ACT	*39	1.00	2840-0000-016	3/8 INT TOOTH LOCKWASHER
ACT	*40	1.00	7007-4984-100	FRONT PANEL WIRE HARNESS ASSY
ACT	AT10001	1.00	2901-7633-100	ATTEN,STEP,0- 10DB/ 1DB,1W,SMA
ACT	AT10002	1.00	2901-7333-000	ATTEN,STEP,0-100DB/100B,3W,SMA
ACT	AT10003	1.00	2901-7333-100	ATTEN,0-69DB/1DB,3W,SMA
ACT	C10001	1.00	1507-0336-021	CAP,UF 33, 20V,TANT, 20
ACT	DS10001	8.00	4818-0000-020	OPTO LED,MLMP-1301,RED
ACT	DS10002	-.--	4818-0000-020	OPTO LED,MLMP-1301,RED

ASSY NO	REVISION	DESCRIPTION	LAST ECN	DATE INC
7005-4940-100	D	MECH ASSY,FRONT PANEL RD-301	8097	12/13/85

STAT	REF DES	QTY	COMP. PART NO.	DESCRIPTION
ACT	DS10003	1.00	4818-0000-021	OPTO LED,HLMP-1503,GREEN
ACT	DS10004	-.--	4818-0000-020	OPTO LED,HLMP-1301,RED
ACT	DS10005	-.--	4818-0000-020	OPTO LED,HLMP-1301,RED
ACT	DS10006	-.--	4818-0000-020	OPTO LED,HLMP-1301,RED
ACT	DS10007	-.--	4818-0000-020	OPTO LED,HLMP-1301,RED
ACT	DS10008	-.--	4818-0000-020	OPTO LED,HLMP-1301,RED
ACT	DS10009	-.--	4818-0000-020	OPTO LED,HLMP-1301,RED
ACT	J10007/J20	8.00	2200-0410-100	CONN,ADAPT,F BNC/F SMA,STR BHD
ACT	J10008/J21	-.--	2200-0410-100	CONN,ADAPT,F BNC/F SMA,STR BHD
ACT	J10009/J22	-.--	2200-0410-100	CONN,ADAPT,F BNC/F SMA,STR BHD
ACT	J10010/J23	-.--	2200-0410-100	CONN,ADAPT,F BNC/F SMA,STR BHD
ACT	J10011/J24	-.--	2200-0410-100	CONN,ADAPT,F BNC/F SMA,STR BHD
ACT	J10012	1.00	2113-0000-020	CONN UG1094/U
ACT	J10013/J25	-.--	2200-0410-100	CONN,ADAPT,F BNC/F SMA,STR BHD
ACT	J10014/J26	-.--	2200-0410-100	CONN,ADAPT,F BNC/F SMA,STR BHD
ACT	J10015/J27	-.--	2200-0410-100	CONN,ADAPT,F BNC/F SMA,STR BHD
ACT	M10001	1.00	2900-0100-802	METER,KW PEAK/DELTA-F--MHZ
ACT	R10001/S2	1.00	4757-0000-001	POT, 10K OHM, 86C2DE20A15/R71
ACT	R10002	2.00	4702-0391-003	RES, 5, 1/4W, 390 OHM
ACT	R10003/R4	1.00	4750-7605-901	POT, 10K/100,86A3DG36AA0376R55
ACT	R10005	1.00	4770-8810-300	POT, 10K OHM, 3540S-1-103
ACT	R10006/S7	1.00	4750-7608-300	POT, 5K OHM, 380SW10-5K-S 78
ACT	R10007	-.--	4702-0391-003	RES, 5, 1/4W, 390 OHM
ACT	S10001	2.00	5114-0000-001	SWITCH TOGGLE CK7101
ACT	S10003	-.--	5114-0000-001	SWITCH TOGGLE CK7101
ACT	S10005	1.00	5115-0000-001	SWITCH GRAYHILL 30-1
ACT	S10006	1.00	5114-0000-004	SWITCH TOGGLE CK7201
ACT	S10008	1.00	5115-0000-007	SWITCHPUSHBUTTON90EAIC4F3J1RN2

ASSY NO.	REVISION	DESCRIPTION	LAST ECN	DATE INC.
7005-4940-200	U	MECH ASSY,REAR PANEL RD-301	10679	01/13/88

STAT	REF.DES.	QTY	COMP. PART NO.	DESCRIPTION
ACT		4.74	6002-0000-001	WIRE,HOOK,TFE,22GA, 7S,BLACK
ACT		1.55	6002-0000-003	WIRE,HOOK,TFE,22GA, 7S,RED
ACT		2.20	6002-0000-004	WIRE,HOOK,TFE,22GA, 7S,ORANGE
ACT		1.32	6002-0000-005	WIRE,HOOK,TFE,22GA, 7S,YELLOW
ACT		1.95	6002-0000-009	WIRE,HOOK,TFE,22GA, 7S,GRAY
ACT		10.34	6002-0000-010	WIRE,HOOK,TFE,22GA, 7S,WHITE
ACT		1.04	6002-0000-014	WIRE,HOOK,TFE,22GA, 7S,WHT/ORG
ACT		1.57	6002-0000-018	WIRE,HOOK,TFE,22GA, 7S,WHT/VIO
ACT		15.00	6004-6005-400	TY-RAP,4.0 LG
ACT		.00	DWG-0000-4912-200	DWG SCHEM,REAR PANEL
ACT	*01	1.00	1405-4950-100	REAR PANEL, RD301
ACT	*05	10.00	2114-0000-027	CONTACT,F D-SUB,CRIMP,20-24,SG
ACT	*06	4.00	1525-0000-001	CLAMP,MTG,
ACT	*11	1.00	7010-0016-000	170VDC PWR SUPP.BD ASSY 750B
ACT	*17	3.00	4835-0000-001	COVER,TO-3 TRANS, PTC-103-1N
ACT	*18	3.00	4835-0000-008	MOUNT,TO-3 TRANS,NYLON, PT1-1
ACT	*19	3.00	3107-0000-001	INSUL,MICA,TO-3 TRANS, DF377A
ACT	*21	6.00	2800-7610-800	SPACER TRANSISTOR COVER AL 1
ACT	*22	4.00	2804-0438-006	SCREW,6-32 X 7/16 PPHM
ACT	*23	6.00	2804-0313-006	SCREW 6-32X5/16 PHIL BIND HD
ACT	*24	3.00	2804-0563-006	SCREW,6-32 X 9/16 PPHM
ACT	*25	4.00	2805-0625-006	SCREW,8-32 X 5/8 PPHM
ACT	*26	2.00	2803-0250-006	SCREW,4-40 X 1/4 PPHM
ACT	*27	4.00	2840-0000-014	8 FLAT WASHER
ACT	*28	3.00	2840-0000-006	6 FLAT WASHER
ACT	*29	22.00	2840-0000-001	WASHER,LOCK,INT TOOTH,6
ACT	*30	8.00	2840-0000-002	WASHER,LOCK,INT TOOTH,8
ACT	*31	3.00	2840-0000-003	WASHER,LOCK,INT TOOTH,4
ACT	*34	19.00	2850-0000-002	NUT,HEX,SMALL PAT,6-32
ACT	*35	8.00	2850-0000-005	NUT,HEX,REG PAT,8-32
ACT	*36	8.00	2850-0000-010	LUG,GND,10
ACT	*37	2.00	2800-7600-121	SPACER,AL,.250OD,4-40ID,1.00LG
ACT	*39	2.00	2850-7601-301	SCREW,.188L4-40.19HH,4-40X.300
ACT	*40	1.00	5106-0000-003	FUSE,1.25,GL,VSLO,250V, 1.0 A
ACT	*43	4.00	2840-0000-004	WASHER,LOCK,INT TOOTH,2
ACT	*44	4.00	2850-0000-007	NUT,HEX,REG PAT,2-56
ACT	*45	1.00	1400-2525-000	BRACKET 1
ACT	*47	4.00	2114-0000-018	CONTACT,F .062D,CRIMP,18-24,TN
ACT	*49	6.00	2114-0000-019	CONTACT,M .062D,CRIMP,18-24,TN
ACT	*50	1.00	5400-3662-700	HEATSINK,REAR PANEL
ACT	*51	1.00	1400-4985-400	BRKT,MTG,170VDC PWR SUPPLY
ACT	*52	4.00	2803-0313-006	SCREW,4-40 X 5/16 PPHM
ACT	*53	2.00	2800-7600-161	SPACER,AL,.31 OD,.125ID,.15 LG
ACT	*54	2.00	2805-2750-006	SCREW 8-32 X 2 3/4 PBHMS
ACT	*55	6.00	2804-0625-006	SCREW,6-32 X 5/8 PPHM
ACT	*56	2.00	2850-0000-008	NUT,HEX,REG PAT,4-40
ACT	*57	1.00	6007-0000-001	TIP,VINYL,RED,.375ID,1.00LG
ACT	C11001	2.00	1501-0102-001	CAP,PF 1000, 600V,DISC, 10
ACT	C11002	-.--	1501-0102-001	CAP,PF 1000, 600V,DISC, 10
ACT	C11003	3.00	1515-0251-025	CAP,UF 300, 25V,ELE, 75
ACT	C11004	4.00	1507-0475-018	CAP,UF 4.7, 35V,TANT, 20
ACT	C11005	-.--	1515-0251-025	CAP,UF 300, 25V,ELE, 75

ASSY NO.	REVISION	DESCRIPTION	LAST ECN	DATE INC
7005-4940-200	U	MECH ASSY,REAR PANEL RD-301	10679	01/13/88

STAT	REF.DES.	QTY	COMP. PART NO.	DESCRIPTION
ACT	C11006	-.--	1507-0475-018	CAP,UF 4.7, 35V,TANT, 20
ACT	C11007	-.--	1515-0251-025	CAP,UF 300, 25V,ELE, 75
ACT	C11008	-.--	1507-0475-018	CAP,UF 4.7, 35V,TANT, 20
ACT	C11009	1.00	1580-1010-510	CAP,UF 100, 50V,ELE, 30
ACT	C11010	-.--	1507-0475-018	CAP,UF 4.7, 35V,TANT, 20
ACT	C11011	1.00	1514-0123-016	CAP,UF12000, 16V,ELE,2S
ACT	C11012	1.00	1514-0222-040	CAP,UF 2200, 40V,ELE,2S
ACT	C11013	1.00	1580-1030-040	CAP,UF10000, 40V,ELE 2ST
ACT	C11014	1.00	1514-0292-040	CAP,UF 2900, 40V,ELE,2S
ACT	CR11001	1.00	4818-0000-013	DIODE, 1N5171 ,
ACT	CR11002	3.00	4823-0000-001	RECT,PK10 ,BRIDGE, 100V,10A
ACT	CR11003	-.--	4823-0000-001	RECT,PK10 ,BRIDGE, 100V,10A
ACT	CR11004	-.--	4823-0000-001	RECT,PK10 ,BRIDGE, 100V,10A
ACT	CR11005	2.00	4815-0000-003	DIODE, 1N4148 ,SIGNAL, 75PRV
ACT	CR11006	-.--	4815-0000-003	DIODE, 1N4148 ,SIGNAL, 75PRV
ACT	E11001	2.00	2813-0000-005	TERM,INSUL,STANDOFF,.148DIA
ACT	E11002	-.--	2813-0000-005	TERM,INSUL,STANDOFF,.148DIA
ACT	F11001	1.00	5106-0000-011	HOLDER,FUSE,BUSSMAN HKP
ACT	GL11001	7.00	2850-0000-009	LUG,GND,6
ACT	GL11002	3.00	2850-0000-011	GROUND LUG HH SMITH 1410-4
ACT	GL11003	-.--	2850-0000-011	GROUND LUG HH SMITH 1410-4
ACT	GL11004	-.--	2850-0000-011	GROUND LUG HH SMITH 1410-4
ACT	GL11005	-.--	2850-0000-009	LUG,GND,6
ACT	GL11006	-.--	2850-0000-009	LUG,GND,6
ACT	GL11007	-.--	2850-0000-009	LUG,GND,6
ACT	GL11008	-.--	2850-0000-009	LUG,GND,6
ACT	GL11009	-.--	2850-0000-009	LUG,GND,6
ACT	GL11010	-.--	2850-0000-009	LUG,GND,6
ACT	GL11011	4.00	2106-0000-009	TERM,GND,BR,2-56X.31/.040DX.16
ACT	GL11012	-.--	2106-0000-009	TERM,GND,BR,2-56X.31/.040DX.16
ACT	GL11013	-.--	2106-0000-009	TERM,GND,BR,2-56X.31/.040DX.16
ACT	GL11014	-.--	2106-0000-009	TERM,GND,BR,2-56X.31/.040DX.16
ACT	J11001	1.00	2220-1020-100	CONN,PWR,AC,MALE RCPT,EAC-301
ACT	J11002	1.00	2116-0000-003	CONN,D-SUB,F,15-P,CCA(CNI)
ACT	J11003	1.00	2115-0000-003	CONN,.062,RECEPT, 5-P
ACT	L11001	2.00	1802-0229-001	IND, 2.2 UH,.160HM,2890-04
ACT	L11002	-.--	1802-0229-001	IND, 2.2 UH,.160HM,2890-04
ACT	P11003A	2.00	2115-0000-005	CONN,.062,PLUG, 5-P
ACT	P11003B	-.--	2115-0000-005	CONN,.062,PLUG, 5-P
ACT	Q11001	1.00	4809-0000-001	TRANS, 2N4398 ,PNP PWR SW AMP
ACT	R11001	1.00	4702-0221-003	RES, 5, 1/4W, 220 OHM
ACT	R11002	1.00	4705-0228-003	RES,10, 2W, .22 OHM,WW
ACT	R11003	1.00	4705-0108-003	RES,10, 2W, .10 OHM,WW
ACT	T11001	1.00	5604-7612-002	TRANSFORMER
ACT	U11001	1.00	5750-0000-004	IC,1824,1.5A -24V REGULATOR
ACT	U11002	1.00	5750-0000-005	IC,15A12,1.5A 12V 2% VREG
ACT	U11003	1.00	5750-0000-000	IC,18A12,1.5A -12V 2% VREG
ACT	U11004	1.00	5750-0000-002	IC,1505,1.5A 5V REGULATOR

ASSY NO	REVISION	DESCRIPTION	LAST ECN	DATE INC
7005-4940-400	B	MECH ASSY,DISPLAY COUNTER	RC0170	01/17/86

STAT	REF DES	QTY	COMP. PART NO	DESCRIPTION
ACT		00	DWG-0000-2510-200	SCHEM,COUNTER LOGIC/GATING/DIS
ACT	*01	1.00	1400-4982-300	BRKT,DISPLAY LEFT
ACT	*02	1.00	1400-4982-301	BRKT,DISPLAY RIGHT
ACT	*03	.50	6002-0000-014	WIRE,HOOK,TFE,22GA, 7S,WHT/ORG
ACT	*04	1.00	6501-4982-400	ENCLOSURE,DISPLAY COUNTER
ACT	*05	1.00	7010-2518-000	COUNTER GATING PC BD ASSY RD
ACT	*06	2.00	6009-0000-005	FLEX STRIP,NM,.100C, 8COND,2LG
ACT	*07	11.00	2803-0250-006	SCREW,4-40 X 1/4 PPHM
ACT	*08	1.00	7010-4931-600	PCB ASSY,COUNTER LOGIC
ACT	*09	1.00	7010-2517-800	COUNTER DISPLAY PC BD ASSY RD
ACT	*11	1.00	2840-7600-209	WASHER FLAT,PHENOLIC 2
ACT	*12	1.00	2100-4852-200	BLOCK, CONN. MTG.
ACT	*13	1.00	2803-0250-003	SCREW,4-40 X 1/4 PFHM
ACT	DS14001	3.00	4600-0000-001	OPTO DISPLAY,SP-352
ACT	DS14002	-.--	4600-0000-001	OPTO DISPLAY,SP-352
ACT	DS14003	-.--	4600-0000-001	OPTO DISPLAY,SP-352

ASSY NO	REVISION	DESCRIPTION	LAST ECN	DATE INC
7005-4940-600	F	MECH ASSY,CARD FRAME	8078	01/07/86

STAT	REF DES	QTY	COMP PART NO.	DESCRIPTION
ACT	*01	1.00	7010-4931-000	PCB ASSY,RANGE BOARD #2
ACT	*02	1.00	7010-4931-300	PCB ASSY,DISCRIMINATOR #2
ACT	*03	1.00	7005-4940-800	MECH ASSY,DELAY LINE COAX
ACT	*04	2.00	1402-4954-000	RAIL,CARD FRAME,OUTER
ACT	*05	1.00	1402-4954-100	RAIL,CARD FRAME,INNER
ACT	*06	1.00	1405-4985-100	PANEL,CARD FRAME
ACT	*07	1.00	1400-4953-600	BRACKET,SMB CONN MTG
ACT	*08	1.00	7010-4930-300	PCB ASSY,RANGE BOARD #1
ACT	*11	1.00	7010-4932-800	PC BD ASSY-DISCR BD NO 1
ACT	*12	33.00	2803-0250-006	SCREW,4-40 X 1/4 PPHM
ACT	*15	1.00	6045-4983-700	RBN CA ASSY,DISC #1--DISC #2
ACT	*18	2.00	2803-0438-006	SCREW,4-40 X 7/16 PPHM
ACT	*19	2.00	6042-4984-400	COAX ASSY SR .086,DISC,2 32LG
ACT	*20	2.00	6042-4984-300	COAX ASSY SR DSCRM 1 98LG
ACT	*21	1.00	7010-4931-100	PCB ASSY,570-800 MZ FILTER
ACT	*22	1.00	7010-4931-200	PCB ASSY,475 MHZ FILTER

ASSY NO	REVISION	DESCRIPTION	LAST ECN	DATE INC
7005-4940-000	B	MECH ASSY,DELAY LINE COAX	8078	12/27/85

STAT	REF DES	QTY	COMP PART NO	DESCRIPTION
ACT	*01	1.00	1414-4952-300	COVER PLATE,DELAY LINE
ACT	*02	2.00	2803-0438-006	SCREW,4-40 X 7/16 PPHM
ACT	*03	1.00	6004-6005-400	TY-RAP,4.0 LG
ACT	*04	9.64	6042-0000-007	CABLE,COAX,FLEX,RG-316/U
ACT	*05	1.00	1400-4954-300	BRKT,SUPT,DELAY LINE
ACT	*06	1.00	1400-4983-500	BRKT,DELAY LINE MTG
ACT	*07	2.00	2123-0000-037	CONN RF SUB AEP 17-0405-188
ACT	*10	2.00	2803-0250-006	SCREW,4-40 X 1/4 PPHM
ACT	*11	2.00	2840-0000-004	WASHER,LOCK,INT TOOTH,2

ASSY NO	REVISION	DESCRIPTION	LAST ECN	DATE INC
7005-4940-000	B	MECH ASSY,MAIN DIODE SWITCH	8498	04/03/86

STAT	REF DES	QTY	COMP PART NO	DESCRIPTION
ACT		1.00	1414-4950-800	COVER,TOP,MAIN DIODE SWITCH
ACT		1.00	1414-4950-900	COVER,BOTTOM,MAIN DIODE SWITCH
ACT		1.00	2803-0188-006	SCREW,4-40 X 3/16 PPHM
ACT		4.00	2803-0438-003	SCREW 4-40 X 7/16 PFHMS
ACT		1.00	2804-0625-006	SCREW,6-32 X 5/8 PPHM
ACT		1.00	2850-0000-014	LUG,GND,4
ACT		1.00	7010-4930-000	PCB ASSY,MAIN DIODE SWITCH
ACT		.00	DWG-0000-4910-000	SCHEM,MAIN DIODE SWITCH
ACT	FL37001	1.00	5801-0000-006	FILTER,EMI/RFI,1500PF,8-32 DIA
ACT	FL37002	1.00	1526-0000-005	CAP,PF 10, 200V,FEEDTHRU
ACT	J37001	2.00	2123-0000-030	CONN,F SMA,W/TERM,STR BULKHEAD
ACT	J37002	-.--	2123-0000-030	CONN,F SMA,W/TERM,STR BULKHEAD

ASSY NO.	REVISION	DESCRIPTION	LAST ECN	DATE INC
7005-4941-300	C	MECH ASSY-FLOOR	9560	02/12/87

STAT	REF.DES.	QTY	COMP. PART NO.	DESCRIPTION
ACT	*01	1.00	1406-4955-600	FLOOR PLATE,RD-301
ACT	*02	1.00	5850-8251-600	OSC,PL, 8.25GHZ,-24.0VDC,+7DBM
ACT	*03	1.00	7010-4930-100	PCB ASSY,DET BUFFER-PWR CKT
ACT	*04	1.00	7005-4940-900	MECH ASSY,MAIN DIODE SWITCH
ACT	*05	1.00	2517-2511-600	X-BAND FRONT END MICROWAVE 3
ACT	*07	1.00	7005-4942-400	MECH ASSY,VCO
ACT	*08	3.00	2100-2515-900	BLOCK 3
ACT	*09	1.00	2506-2516-000	PLATE END 2
ACT	*10	1.00	2200-0110-400	CONN,ADAPT,M2M SMA,RIGHT ANGLE
ACT	*11	1.00	2525-4952-000	GASKET,RF,FLOOR MODULES
ACT	*12	2.00	2803-0250-006	SCREW,4-40 X 1/4 PPHM
ACT	*13	48.00	2803-0313-006	SCREW,4-40 X 5/16 PPHM
ACT	*14	1.00	0002-0000-000	*** REF DESIG NOT USED ***
ACT	*15	2.00	2803-0625-006	SCREW,4-40 X 5/8 PPHM
ACT	*16	8.00	2804-0375-006	SCREW,6-32 X 3/8 PPHM
ACT	*17	4.00	2804-0438-006	SCREW,6-32 X 7/16 PPHM
ACT	*18	2.00	2800-7600-187	SPACER,AL,.25HEX,4-40ID,1.17LG
ACT	*19	50.00	2840-0000-003	WASHER,LOCK,INT TOOTH,4
ACT	*20	12.00	2840-0000-001	WASHER,LOCK,INT TOOTH,6
ACT	*21	1.00	7007-4986-600	WIRE HARNESS ASSY MAIN
ACT	AT51001	1.00	2901-0000-007	ATTEN, 20DB, 2W,SMA,12.4GHZ
ACT	K51001	1.00	4501-0000-009	RELAY AMP. 315-10002-3
ACT	TAG#10	1.00	6042-4985-700	COAX ASSY,086 SR,VCO TO PRSCLR
ACT	TAG#11	1.00	6042-4986-000	COAX ASSY - VCO TO MAIN ATTEN
ACT	TAG#12	1.00	6050-0931-650	COAX ASSY,316,R M SMA/R M SMA
ACT	TAG#13	1.00	6042-4985-800	COAX ASSY-VCO TO R2 ATTEN
ACT	TAG#14	1.00	6042-4985-900	COAX ASSY - R2 ATTEN TO VCO
ACT	TAG#22	1.00	6050-1022-320	COAX ASSY,316,R F SMB/ES--001
ACT	TAG#23	1.00	6042-4986-400	COAX ASSY - 8.25GHZ TO X-BAND
ACT	TAG#34	1.00	6042-4985-600	COAX ASSY,SR 086,VCO TO DISC
ACT	TAG#35	1.00	6042-4986-300	COAX ASSY .086,VCO TO REAR PNL

ASSY NO.	REVISION	DESCRIPTION	LAST ECN	DATE INC
7005-4942-400	G	MECH ASSY,VCO	10847	02/16/88

STAT	REF.DES.	QTY	COMP. PART NO.	DESCRIPTION
ACT		4.00	2850-0000-106	SCREW,.875L6-32.25HH,6-32X.250
ACT		.92	6003-0000-001	WIRE,HOOK,TFE,26GA, 7S,BLACK
ACT		.92	6003-0000-002	WIRE,HOOK,TFE,26GA, 7S,BROWN
ACT		1.00	6003-0000-003	WIRE,HOOK,TFE,26GA, 7S,RED
ACT		.62	6003-0000-006	WIRE,HOOK,TFE,26GA, 7S,GREEN
ACT		.62	6003-0000-007	WIRE,HOOK,TFE,26GA, 7S,BLUE
ACT		.50	6003-0000-008	WIRE,HOOK,TFE,26GA, 7S,VIOLET
ACT		.62	6003-0000-009	WIRE,HOOK,TFE,26GA, 7S,GRAY
ACT		.62	6003-0000-010	WIRE,HOOK,TFE,26GA, 7S,WHITE
ACT		.58	6003-0000-012	WIRE,HOOK,TFE,26GA, 7S,WHT/BRN
ACT		.70	6003-0000-013	WIRE,HOOK,TFE,26GA, 7S,WHT/RED
ACT		.90	6003-0000-014	WIRE,HOOK,TFE,26GA, 7S,WHT/ORG
ACT		.45	6003-0000-015	WIRE,HOOK,TFE,26GA, 7S,WHT/YEL
ACT	*01	1.00	2100-4954-800	BLOCK,VCO BASE
ACT	*02	14.00	2840-7600-208	WASHER,ALUM,.380D,.250ID,.020T
ACT	*03	1.00	6042-4986-100	COAX ASSY .086 SR SPLTR TO AMP
ACT	*04	1.00	6042-4986-200	COAX ASSY.086 SR AMP DIODE SW
ACT	*05	18.00	0002-0000-000	*** REF DESIG NOT USED ***
ACT	*06	1.00	1700-4922-400	PC BD,VCO/SPLITTER
ACT	*07	1.00	1700-4922-600	PC BD,CTR DIODE SW/DIPLEXER
ACT	*08	1.00	1700-4922-500	PC BD,PWR AMP
ACT	*09	26.00	2804-0625-006	SCREW,6-32 X 5/8 PPHM
ACT	*10	1.00	1414-4955-000	COVER,VCO/SPLITTER
ACT	*11	2.00	2803-0625-006	SCREW,4-40 X 5/8 PPHM
ACT	*12	1.00	1414-4954-900	COVER,CONTOUR DIODE SWITCH
ACT	*13	1.00	1414-4955-100	COVER,POWER AMP
ACT	*14	1.00	7010-4932-700	PCB ASSY,AGC
ACT	*15	3.00	2850-3851-600	SCREW,.300L4-40.19HH,6-32X.700
ACT	*16	3.00	2803-0250-006	SCREW,4-40 X 1/4 PPHM
ACT	*17	1.00	2109-0000-007	CLAMP CABLE TYRAP TY34M.8
ACT	*18	1.00	2804-0313-006	SCREW 6-32X5/16 PHIL BIND HD
ACT	*19	1.00	2840-0000-006	6 FLAT WASHER
ACT	*20	13.00	2114-0000-022	CONTACT,DCANT,CRIMP,22-30,TIN
ACT	*21	1.00	2127-9900-100	KEY,POLARIZIN,MOLEX 15-04-9209
ACT	*22	6.00	6004-6005-400	TY-RAP,4.0 LG
ACT	*23	.00	1050-0000-075	WIRE,BUS,TINNED COPPER,26GA
ACT	C44001	12.00	1620-2200-500	CAP,PF 22, 100V,CHIP,NPO
ACT	C44002	-.--	1620-2200-500	CAP,PF 22, 100V,CHIP,NPO
ACT	C44003	-.--	1620-2200-500	CAP,PF 22, 100V,CHIP,NPO
ACT	C44004	5.00	1506-0030-017	CAP,PF 3.0, 100V,MICA, 17
ACT	C44005	-.--	1506-0030-017	CAP,PF 3.0, 100V,MICA, 17
ACT	C44006	-.--	0002-0000-000	*** REF DESIG NOT USED ***
ACT	C44007	-.--	1620-2200-500	CAP,PF 22, 100V,CHIP,NPO
ACT	C44008	-.--	1620-2200-500	CAP,PF 22, 100V,CHIP,NPO
ACT	C44009	-.--	1620-2200-500	CAP,PF 22, 100V,CHIP,NPO
ACT	C44010	-.--	0002-0000-000	*** REF DESIG NOT USED ***
ACT	C44011	-.--	1620-2200-500	CAP,PF 22, 100V,CHIP,NPO
ACT	C44012	-.--	1620-2200-500	CAP,PF 22, 100V,CHIP,NPO
ACT	C45001	12.00	1620-2210-600	CAP,PF 220, 100V,CHIP,NPO
ACT	C45002	1.00	1523-0000-005	CAP,PF 10, 50V,CHIP,NPO
ACT	C45003	-.--	1506-0030-017	CAP,PF 3.0, 100V,MICA, 17
ACT	C45004	6.00	1620-2090-510	CAP,PF 2.0, 200V,CHIP,NPO

ASSY NO.	REVISION	DESCRIPTION	LAST ECN	DATE INC
7005-4942-400	C	MECH ASSY,VCO	10847	02/16/88

STAT	REF.DES.	QTY	COMP. PART NO.	DESCRIPTION
ACT	C45005	-.--	1620-2090-510	CAP,PF 2.0, 200V,CHIP,NPO
ACT	C45006	-.--	1620-2210-600	CAP,PF 220, 100V,CHIP,NPO
ACT	C45007	-.--	1620-2090-510	CAP,PF 2.0, 200V,CHIP,NPO
ACT	C45008	-.--	1620-2090-510	CAP,PF 2.0, 200V,CHIP,NPO
ACT	C45009	-.--	1620-2210-600	CAP,PF 220, 100V,CHIP,NPO
ACT	C45010	3.00	1523-0000-002	CAP,PF 1800, 50V,CHIP,X7R
ACT	C45011	-.--	1620-2200-500	CAP,PF 22, 100V,CHIP,NPO
ACT	C45012	-.--	1620-2090-510	CAP,PF 2.0, 200V,CHIP,NPO
ACT	C46001	1.00	1506-0101-017	CAP,PF, 100, 100V,NPO, 5
ACT	C46002	-.--	1620-2200-500	CAP,PF 22, 100V,CHIP,NPO
ACT	C46003	2.00	1620-1090-511	CAP,PF 1.0, 50V,CHIP
ACT	C46004	-.--	1620-2200-500	CAP,PF 22, 100V,CHIP,NPO
ACT	C46005	-.--	1620-1090-511	CAP,PF 1.0, 50V,CHIP
ACT	C46006	-.--	1620-2210-600	CAP,PF 220, 100V,CHIP,NPO
ACT	C46007	-.--	1620-2200-500	CAP,PF 22, 100V,CHIP,NPO
ACT	C46008	-.--	0002-0000-000	*** REF DESIG NOT USED ***
ACT	C46009	-.--	1620-2210-600	CAP,PF 220, 100V,CHIP,NPO
ACT	C46010	-.--	1620-2210-600	CAP,PF 220, 100V,CHIP,NPO
ACT	C46011	-.--	1506-0030-017	CAP,PF 3.0, 100V,MICA, 17
ACT	C46012	-.--	1620-2210-600	CAP,PF 220, 100V,CHIP,NPO
ACT	C46013	-.--	1523-0000-002	CAP,PF 1800, 50V,CHIP,X7R
ACT	C46014	-.--	1620-2210-600	CAP,PF 220, 100V,CHIP,NPO
ACT	C46015	2.00	1506-0220-017	CAP,PF 22, 100V,NPO, 5
ACT	C46016	-.--	1620-2210-600	CAP,PF 220, 100V,CHIP,NPO
ACT	C46017	-.--	1620-2210-600	CAP,PF 220, 100V,CHIP,NPO
ACT	C46018	-.--	1506-0030-017	CAP,PF 3.0, 100V,MICA, 17
ACT	C46019	-.--	1620-2210-600	CAP,PF 220, 100V,CHIP,NPO
ACT	C46020	-.--	1523-0000-002	CAP,PF 1800, 50V,CHIP,X7R
ACT	C46021	-.--	1620-2210-600	CAP,PF 220, 100V,CHIP,NPO
ACT	C46022	-.--	1506-0220-017	CAP,PF 22, 100V,NPO, 5
ACT	C46023	2.00	1506-0020-017	CAP,PF 2.2,100V,NPO,25
ACT	C46024	-.--	1506-0020-017	CAP,PF 2.2,100V,NPO,25
ACT	C46025	-.--	1620-2090-510	CAP,PF 2.0, 200V,CHIP,NPO
ACT	C48001	1.00	1580-4792-305	CAP,UF 4.7, 25V,ELE,RDL
ACT	CR44001	-.--	0002-0000-000	*** REF DESIG NOT USED ***
ACT	CR44002	-.--	0002-0000-000	*** REF DESIG NOT USED ***
ACT	CR44003	16.00	4825-0000-002	DIODE,PS083B ,PIN,.10PF, 3NS
ACT	CR44004	-.--	4825-0000-002	DIODE,PS083B ,PIN,.10PF, 3NS
ACT	CR44005	-.--	4825-0000-002	DIODE,PS083B ,PIN,.10PF, 3NS
ACT	CR44006	-.--	4825-0000-002	DIODE,PS083B ,PIN,.10PF, 3NS
ACT	CR44007	-.--	4825-0000-002	DIODE,PS083B ,PIN,.10PF, 3NS
ACT	CR44008	-.--	4825-0000-002	DIODE,PS083B ,PIN,.10PF, 3NS
ACT	CR44009	-.--	4825-0000-002	DIODE,PS083B ,PIN,.10PF, 3NS
ACT	CR44010	-.--	4825-0000-002	DIODE,PS083B ,PIN,.10PF, 3NS
ACT	CR44011	-.--	4825-0000-002	DIODE,PS083B ,PIN,.10PF, 3NS
ACT	CR44012	-.--	4825-0000-002	DIODE,PS083B ,PIN,.10PF, 3NS
ACT	CR44013	-.--	4825-0000-002	DIODE,PS083B ,PIN,.10PF, 3NS
ACT	CR44014	-.--	4825-0000-002	DIODE,PS083B ,PIN,.10PF, 3NS
ACT	CR44015	3.00	4915-0500-100	DIODE,MA-4E282 ,S BAR, 70VBR
ACT	CR44016	-.--	4915-0500-100	DIODE,MA-4E282 ,S BAR, 70VBR
ACT	CR44017	-.--	4825-0000-002	DIODE,PS083B ,PIN,.10PF, 3NS
ACT	CR44018	-.--	4825-0000-002	DIODE,PS083B ,PIN,.10PF, 3NS

ASSY NO.	REVISION	DESCRIPTION	LAST ECN	DATE INC
7005-4942-400	C	MECH ASSY,VCO	10847	02/16/88

STAT	REF.DES.	QTY	COMP. PART NO.	DESCRIPTION
ACT	CR44019	-.--	4915-0500-100	DIODE,MA-4E282 ,S BAR, 70VBR
ACT	CR45001	-.--	4825-0000-002	DIODE,PS083B ,PIN,.10PF, 3NS
ACT	CR45002	-.--	4825-0000-002	DIODE,PS083B ,PIN,.10PF, 3NS
ACT	CR45003	1.00	4815-0000-003	DIODE, 1N4148 ,SIGNAL, 75PRV
ACT	CR46001	1.00	4829-0000-001	DIODE,MA-45102 ,VARC,1.2PF/-4V
ACT	FL48001	13.00	5801-0000-006	FILTER,EMI/RFI,1500PF,8-32 DIA
ACT	FL48002	-.--	5801-0000-006	FILTER,EMI/RFI,1500PF,8-32 DIA
ACT	FL48003	-.--	5801-0000-006	FILTER,EMI/RFI,1500PF,8-32 DIA
ACT	FL48004	-.--	5801-0000-006	FILTER,EMI/RFI,1500PF,8-32 DIA
ACT	FL48005	-.--	5801-0000-006	FILTER,EMI/RFI,1500PF,8-32 DIA
ACT	FL48006	-.--	5801-0000-006	FILTER,EMI/RFI,1500PF,8-32 DIA
ACT	FL48007	-.--	5801-0000-006	FILTER,EMI/RFI,1500PF,8-32 DIA
ACT	FL48008	-.--	5801-0000-006	FILTER,EMI/RFI,1500PF,8-32 DIA
ACT	FL48009	4.00	1526-0000-006	CAP,PF 100, 200V,FEEDTHRU
ACT	FL48011	-.--	1526-0000-006	CAP,PF 100, 200V,FEEDTHRU
ACT	FL48012	-.--	1526-0000-006	CAP,PF 100, 200V,FEEDTHRU
ACT	FL48013	-.--	1526-0000-006	CAP,PF 100, 200V,FEEDTHRU
ACT	FL48014	-.--	5801-0000-006	FILTER,EMI/RFI,1500PF,8-32 DIA
ACT	FL48015	-.--	5801-0000-006	FILTER,EMI/RFI,1500PF,8-32 DIA
ACT	FL48016	-.--	5801-0000-006	FILTER,EMI/RFI,1500PF,8-32 DIA
ACT	FL48017	-.--	5801-0000-006	FILTER,EMI/RFI,1500PF,8-32 DIA
ACT	FL48018	-.--	5801-0000-006	FILTER,EMI/RFI,1500PF,8-32 DIA
ACT	G48001	2.00	2850-0000-041	LUG,GND,8
ACT	G48002	-.--	2850-0000-041	LUG,GND,8
ACT	J48001	7.00	2123-0000-030	CONN,F SMA,W/TERM,STR BULKHEAD
ACT	J48002	-.--	2123-0000-030	CONN,F SMA,W/TERM,STR BULKHEAD
ACT	J48003	-.--	0002-0000-000	*** REF DESIG NOT USED ***
ACT	J48004	-.--	2123-0000-030	CONN,F SMA,W/TERM,STR BULKHEAD
ACT	J48005	-.--	0002-0000-000	*** REF DESIG NOT USED ***
ACT	J48006	-.--	0002-0000-000	*** REF DESIG NOT USED ***
ACT	J48007	-.--	2123-0000-030	CONN,F SMA,W/TERM,STR BULKHEAD
ACT	J48008	-.--	2123-0000-030	CONN,F SMA,W/TERM,STR BULKHEAD
ACT	J48009	-.--	0002-0000-000	*** REF DESIG NOT USED ***
ACT	J48010	-.--	2123-0000-030	CONN,F SMA,W/TERM,STR BULKHEAD
ACT	J48011	-.--	2123-0000-030	CONN,F SMA,W/TERM,STR BULKHEAD
ACT	L44001	23.00	1806-0108-002	IND, .1 UH,.130HM,0819-00
ACT	L44002	-.--	1806-0108-002	IND, .1 UH,.130HM,0819-00
ACT	L44003	-.--	1806-0108-002	IND, .1 UH,.130HM,0819-00
ACT	L44004	-.--	1806-0108-002	IND, .1 UH,.130HM,0819-00
ACT	L44005	-.--	1806-0108-002	IND, .1 UH,.130HM,0819-00
ACT	L44006	-.--	1806-0108-002	IND, .1 UH,.130HM,0819-00
ACT	L44007	-.--	1806-0108-002	IND, .1 UH,.130HM,0819-00
ACT	L44008	-.--	1806-0108-002	IND, .1 UH,.130HM,0819-00
ACT	L44009	-.--	1806-0108-002	IND, .1 UH,.130HM,0819-00
ACT	L44010	-.--	1806-0108-002	IND, .1 UH,.130HM,0819-00
ACT	L44011	-.--	1806-0108-002	IND, .1 UH,.130HM,0819-00
ACT	L44012	-.--	1806-0108-002	IND, .1 UH,.130HM,0819-00
ACT	L44013	-.--	1806-0108-002	IND, .1 UH,.130HM,0819-00
ACT	L44014	-.--	1806-0108-002	IND, .1 UH,.130HM,0819-00
ACT	L45001	-.--	1806-0108-002	IND, .1 UH,.130HM,0819-00
ACT	L45002	-.--	1806-0108-002	IND, .1 UH,.130HM,0819-00
ACT	L45003	-.--	1806-0108-002	IND, .1 UH,.130HM,0819-00

ASSY NO.	REVISION	DESCRIPTION	LAST ECN	DATE INC
7005-4942-400	G	MECH ASSY,VCO	10847	02/16/88

STAT	REF.DES.	QTY	COMP. PART NO.	DESCRIPTION
ACT	L45004	-.--	1806-0108-002	IND, .1 UH,.13OHM,0819-00
ACT	L46002	-.--	1806-0108-002	IND, .1 UH,.13OHM,0819-00
ACT	L46003	-.--	1806-0108-002	IND, .1 UH,.13OHM,0819-00
ACT	L46004	-.--	1806-0108-002	IND, .1 UH,.13OHM,0819-00
ACT	L46005	-.--	1806-0108-002	IND, .1 UH,.13OHM,0819-00
ACT	L46006	-.--	1806-0108-002	IND, .1 UH,.13OHM,0819-00
ACT	P47001	1.00	2115-0000-014	CONN PLASTIC MOLEX 22-01-2151
ACT	Q45001	5.00	5010-0203-100	TRANS,HXTR-3101,NPN HF AMP
ACT	Q45002	2.00	4803-0000-004	TRANS,NPN,LP/VHF AMP
ACT	Q45003	1.00	4807-0000-002	TRANS, 2N3905 ,PNP HS SW
ACT	Q45004	1.00	5010-0503-000	TRANS,MRF1000MB,NPN PWR HF AMP
ACT	Q46001	-.--	4803-0000-004	TRANS,NPN,LP/VHF AMP
ACT	Q46002	-.--	5010-0203-100	TRANS,HXTR-3101,NPN HF AMP
ACT	Q46003	-.--	5010-0203-100	TRANS,HXTR-3101,NPN HF AMP
ACT	Q46004	-.--	5010-0203-100	TRANS,HXTR-3101,NPN HF AMP
ACT	Q46006	-.--	5010-0203-100	TRANS,HXTR-3101,NPN HF AMP
ACT	R44001	7.00	4701-0101-003	RES, 5, 1/8W, 100 OHM
ACT	R44002	-.--	0002-0000-000	*** REF DESIG NOT USED ***
ACT	R44003	-.--	4701-0101-003	RES, 5, 1/8W, 100 OHM
ACT	R44004	5.00	4719-0510-002	RES, 5, 1/8W, 51 OHM CHIP
ACT	R44005	2.00	4701-0560-003	RES, 5, 1/8W, 56 OHM
ACT	R44006	5.00	4701-0471-003	RES, 5, 1/8W, 470 OHM
ACT	R44007	1.00	4701-0569-002	RES, 5, 1/8W, 5.6 OHM,
ACT	R44008	-.--	4701-0471-003	RES, 5, 1/8W, 470 OHM
ACT	R44009	-.--	4701-0560-003	RES, 5, 1/8W, 56 OHM
ACT	R44010	8.00	4701-0470-003	RES, 5, 1/8W, 47 OHM
ACT	R44011	-.--	4701-0101-003	RES, 5, 1/8W, 100 OHM
ACT	R44012	-.--	4701-0101-003	RES, 5, 1/8W, 100 OHM
ACT	R44013	-.--	4719-0510-002	RES, 5, 1/8W, 51 OHM CHIP
ACT	R44014	-.--	4701-0470-003	RES, 5, 1/8W, 47 OHM
ACT	R44015	-.--	4701-0470-003	RES, 5, 1/8W, 47 OHM
ACT	R44016	2.00	4701-0221-003	RES, 5, 1/8W, 220 OHM
ACT	R44017	-.--	4719-0510-002	RES, 5, 1/8W, 51 OHM CHIP
ACT	R44018	5.00	4701-0820-003	RES, 5, 1/8W, 82 OHM
ACT	R44019	-.--	4701-0221-003	RES, 5, 1/8W, 220 OHM
ACT	R44020	-.--	4719-0510-002	RES, 5, 1/8W, 51 OHM CHIP
ACT	R44021	-.--	4719-0510-002	RES, 5, 1/8W, 51 OHM CHIP
ACT	R44022	-.--	4701-0820-003	RES, 5, 1/8W, 82 OHM
ACT	R45001	-.--	0002-0000-000	*** REF DESIG NOT USED ***
ACT	R45002	-.--	0002-0000-000	*** REF DESIG NOT USED ***
ACT	R45003	-.--	0002-0000-000	*** REF DESIG NOT USED ***
ACT	R45004	2.00	4701-0330-003	RES, 5, 1/8W, 33 OHM
ACT	R45005	1.00	4701-0333-003	RES, 5, 1/8W, 33K OHM
ACT	R45006	1.00	4702-0391-003	RES, 5, 1/4W, 390 OHM
ACT	R45007	-.--	4701-0101-003	RES, 5, 1/8W, 100 OHM
ACT	R45008	-.--	0002-0000-000	*** REF DESIG NOT USED ***
ACT	R45009	-.--	4701-0101-003	RES, 5, 1/8W, 100 OHM
ACT	R45010	1.00	4701-0183-003	RES, 5, 1/8W, 18K OHM
ACT	R45011	2.00	4702-0221-003	RES, 5, 1/4W, 220 OHM
ACT	R45012	1.00	4701-0682-003	RES, 5, 1/8W, 6.8K OHM
ACT	R45013	1.00	4701-0152-003	RES, 5, 1/8W, 1.5K OHM
ACT	R45014	1.00	4701-0331-003	RES, 5, 1/8W, 330 OHM

ASSY NO.	REVISION	DESCRIPTION	LAST ECN	DATE INC
7005-4942-400	C	MECH ASSY,VCO	10847	02/16/88

STAT	REF.DES.	QTY	COMP. PART NO.	DESCRIPTION
ACT	R45015	1.00	4702-0479-003	RES, 5, 1/4W, 4.7 OHM
ACT	R46001	-.--	4701-0471-003	RES, 5, 1/8W, 470 OHM
ACT	R46002	-.--	4701-0470-003	RES, 5, 1/8W, 47 OHM
ACT	R46003	2.00	4701-0272-003	RES, 5, 1/8W, 2.7K OHM
ACT	R46004	-.--	4701-0272-003	RES, 5, 1/8W, 2.7K OHM
ACT	R46005	1.00	4702-0331-003	RES, 5, 1/4W, 330 OHM
ACT	R46006	-.--	4701-0820-003	RES, 5, 1/8W, 82 OHM
ACT	R46007	1.00	4701-0223-003	RES, 5, 1/8W, 22K OHM
ACT	R46008	1.00	4706-1000-001	RES, 1, 1/4W, 100 OHM
ACT	R46009	1.00	4701-0391-003	RES, 5, 1/8W, 390 OHM
ACT	R46010	-.--	4701-0330-003	RES, 5, 1/8W, 33 OHM
ACT	R46011	1.00	4701-0153-003	RES, 5, 1/8W, 15K OHM
ACT	R46012	-.--	0002-0000-000	*** REF DESIG NOT USED ***
ACT	R46013	-.--	4701-0470-003	RES, 5, 1/8W, 47 OHM
ACT	R46014	-.--	4701-0820-003	RES, 5, 1/8W, 82 OHM
ACT	R46015	2.00	4701-0393-003	RES, 5, 1/8W, 39K OHM
ACT	R46016	-.--	4701-0471-003	RES, 5, 1/8W, 470 OHM
ACT	R46017	-.--	0002-0000-000	*** REF DESIG NOT USED ***
ACT	R46018	2.00	4702-0181-003	RES, 5, 1/4W, 180 OHM
ACT	R46019	-.--	4701-0470-003	RES, 5, 1/8W, 47 OHM
ACT	R46020	-.--	4701-0393-003	RES, 5, 1/8W, 39K OHM
ACT	R46021	-.--	4701-0471-003	RES, 5, 1/8W, 470 OHM
ACT	R46022	-.--	4701-0470-003	RES, 5, 1/8W, 47 OHM
ACT	R46023	-.--	4701-0820-003	RES, 5, 1/8W, 82 OHM
ACT	R46024	-.--	0002-0000-000	*** REF DESIG NOT USED ***
ACT	R46025	-.--	4702-0181-003	RES, 5, 1/4W, 180 OHM
ACT	R46026	-.--	4701-0470-003	RES, 5, 1/8W, 47 OHM
ACT	R46027	-.--	4701-0101-003	RES, 5, 1/8W, 100 OHM
ACT	R48001	-.--	4702-0221-003	RES, 5, 1/4W, 220 OHM
ACT	U46001	2.00	5050-2501-100	IC,MSA-0335-22,IC AMP
ACT	U46002	-.--	5050-2501-100	IC,MSA-0335-22,IC AMP

ASSY NO.	REVISION	DESCRIPTION	LAST ECN	DATE INC
7010-0016-000	E	170VDC PWR SUPP.BD ASSY 750B	9744	04/04/87

STAT	REF.DES.	QTY	COMP. PART NO.	DESCRIPTION
ACT		.00	DWG-0000-4911-900	DWG SCHEM,170VDC POWER SUPPLY
ACT	*01	1.00	1700-0015-900	BD PC 170V POWER SUPPLY 1
ACT	*02	1.00	4835-0000-012	PAD,MTG,TO-5 TRANS, 511-038
ACT	*03	1.00	4835-0000-016	PLUG,HOLE,SNAP-IN,BPF-3/8BLACK
ACT	C16001	2.00	1515-0300-051	CAP,UF 30, 150V,ELE, 100
ACT	C16002	-.--	1515-0300-051	CAP,UF 30, 150V,ELE, 100
ACT	CR16001	1.00	4815-0000-002	DIODE, 1N4004 ,RECT, 400V, 1A
ACT	CR16002	3.00	4815-0000-003	DIODE, 1N4148 ,SIGNAL, 75PRV
ACT	CR16003	-.--	4815-0000-003	DIODE, 1N4148 ,SIGNAL, 75PRV
ACT	CR16004	-.--	4815-0000-003	DIODE, 1N4148 ,SIGNAL, 75PRV
ACT	CR16005	1.00	4818-0000-011	DIODE, 1N5278B ,ZENER,170V,.5W
ACT	Q16001	1.00	4809-0000-003	TRANS,2N3439,NPN PWR AMP
ACT	R16001	2.00	4702-0104-003	RES, 5, 1/4W, 100K OHM
ACT	R16002	-.--	4702-0104-003	RES, 5, 1/4W, 100K OHM
ACT	R16003	1.00	4702-0153-003	RES, 5, 1/4W, 15K OHM
ACT	R16004	1.00	0002-0000-000	*** REF DESIG NOT USED ***
ACT	R16005	1.00	4702-0101-003	RES, 5, 1/4W, 100 OHM

ASSY NO.	REVISION	DESCRIPTION	LAST ECN	DATE INC
7010-2518-000	E2	COUNTER GATING PC BD ASSY RD	10475	11/24/87

STAT	REF.DES.	QTY	COMP. PART NO.	DESCRIPTION
ACT		.00	DWG-0000-2510-200	SCHEM,COUNTER LOGIC/GATING/DIS
ACT	*01	1.00	1700-2505-200	BD PC 2
ACT	C31001	4.00	1501-0103-005	CAP,UF .010, 50V,DISC, 10
ACT	C31002	2.00	1507-0105-018	CAP,UF 1.0, 35V,TANT, 20
ACT	C31003	1.00	1507-0685-020	CAP,UF 6.8, 15V,TANT, 20
ACT	C31004	-.--	1507-0105-018	CAP,UF 1.0, 35V,TANT, 20
ACT	C31005	-.--	1501-0103-005	CAP,UF .010, 50V,DISC, 10
ACT	C31006	-.--	1501-0103-005	CAP,UF .010, 50V,DISC, 10
ACT	C31007	-.--	1501-0103-005	CAP,UF .010, 50V,DISC, 10
ACT	C31008	1.00	1523-0000-002	CAP,PF 1800, 50V,CHIP,X7R
ACT	C31009	2.00	1506-0101-017	CAP,PF, 100, 100V,NPO, 5
ACT	C31010	5.00	1521-0000-008	CAP,UF .10, 50V,DIP,Z5U
ACT	C31011	-.--	1521-0000-008	CAP,UF .10, 50V,DIP,Z5U
ACT	C31012	-.--	1521-0000-008	CAP,UF .10, 50V,DIP,Z5U
ACT	C31013	-.--	1521-0000-008	CAP,UF .10, 50V,DIP,Z5U
ACT	C31014	-.--	1521-0000-008	CAP,UF .10, 50V,DIP,Z5U
ACT	C31015	-.--	1506-0101-017	CAP,PF, 100, 100V,NPO, 5
ACT	CR31001	1.00	4815-0000-003	DIODE, 1N4148 ,SIGNAL, 75PRV
ACT	J14001	1.00	2115-0000-021	CONN MOLEX 22-05-2181
ACT	Q31001	2.00	4805-0000-003	TRANS, 2N3646 ,NPN HS SW
ACT	Q31002	-.--	4805-0000-003	TRANS, 2N3646 ,NPN HS SW
ACT	Q31003	2.00	4801-0000-001	TRANS, 2N2222 ,NPN HS SW
ACT	Q31004	-.--	4801-0000-001	TRANS, 2N2222 ,NPN HS SW
ACT	Q31005	2.00	4805-0000-001	TRANS,2N2907A,PNP HS SW (3251)
ACT	Q31006	-.--	4805-0000-001	TRANS,2N2907A,PNP HS SW (3251)
ACT	R31001	1.00	4702-0331-003	RES, 5, 1/4W, 330 OHM
ACT	R31002	1.00	4702-0393-003	RES, 5, 1/4W, 39K OHM
ACT	R31003	6.00	4702-0102-003	RES, 5, 1/4W, 1.0K OHM
ACT	R31004	1.00	4702-0152-003	RES, 5, 1/4W, 1.5K OHM
ACT	R31005	-.--	4702-0102-003	RES, 5, 1/4W, 1.0K OHM
ACT	R31006	1.00	4702-0153-003	RES, 5, 1/4W, 15K OHM
ACT	R31007	1.00	4752-0203-002	POT, 20K OHM, 62-1-1-203
ACT	R31008	-.--	4702-0102-003	RES, 5, 1/4W, 1.0K OHM
ACT	R31009	-.--	4702-0102-003	RES, 5, 1/4W, 1.0K OHM
ACT	R31010	-.--	4702-0102-003	RES, 5, 1/4W, 1.0K OHM
ACT	R31011	-.--	4702-0102-003	RES, 5, 1/4W, 1.0K OHM
ACT	R31012	1.00	4702-0470-003	RES, 5, 1/4W, 47 OHM
ACT	U31001	6.00	3130-0000-013	IC,7490A,DECADE COUNTER
ACT	U31002	-.--	3130-0000-013	IC,7490A,DECADE COUNTER
ACT	U31003	-.--	3130-0000-013	IC,7490A,DECADE COUNTER
ACT	U31004	-.--	3130-0000-013	IC,7490A,DECADE COUNTER
ACT	U31005	-.--	3130-0000-013	IC,7490A,DECADE COUNTER
ACT	U31006	-.--	3130-0000-013	IC,7490A,DECADE COUNTER
ACT	U31007	1.00	3130-0000-001	IC,7400,QUAD 2-INPUT NAND

ASSY NO.	REVISION	DESCRIPTION	LAST ECN	DATE INC
7010-4930-000	C5	PCB ASSY,MAIN DIODE SWITCH	8498	04/03/86

STAT	REF DES.	QTY	COMP. PART NO.	DESCRIPTION
ACT		.00	DWG-0000-4910-000	SCHEM,MAIN DIODE SWITCH
ACT	*01	1.00	1700-4920-000	PC BD,MAIN DIODE SWITCH
ACT	C39001	2.00	1506-0100-017	CAP,PF 10, 200V,NPO, 5
ACT	C39002	-.--	1506-0100-017	CAP,PF 10, 200V,NPO, 5
ACT	C39003	2.00	1523-0000-004	CAP,PF 47, 50V,CHIP,NPO
ACT	C39004	-.--	1523-0000-004	CAP,PF 47, 50V,CHIP,NPO
ACT	CR39001	8.00	4915-0501-100	DIODE,8 BAR, 5082-2215
ACT	CR39002	-.--	4915-0501-100	DIODE,8 BAR, 5082-2215
ACT	CR39003	-.--	4915-0501-100	DIODE,8 BAR, 5082-2215
ACT	CR39004	-.--	4915-0501-100	DIODE,8 BAR, 5082-2215
ACT	CR39005	-.--	4915-0501-100	DIODE,8 BAR, 5082-2215
ACT	CR39006	-.--	4915-0501-100	DIODE,8 BAR, 5082-2215
ACT	L39001	4.00	1801-0108-001	IND, .10UH, .08OHM,1025-94
ACT	L39002	-.--	1801-0108-001	IND, .10UH, .08OHM,1025-94
ACT	L39003	.00	0003-0000-000	***** FOR REFERENCE ONLY *****
ACT	L39004	-.--	1801-0108-001	IND, .10UH, .08OHM,1025-94
ACT	L39005	-.--	1801-0108-001	IND, .10UH, .08OHM,1025-94
ACT	L39006	1.00	1801-0338-001	IND, .33UH, .2 OHM,1025-08
ACT	R39001	2.00	4701-0121-003	RES, 5, 1/8W, 120 OHM
ACT	R39002	2.00	4701-0101-003	RES, 5, 1/8W, 100 OHM
ACT	R39003	-.--	4701-0101-003	RES, 5, 1/8W, 100 OHM
ACT	R39004	-.--	4701-0121-003	RES, 5, 1/8W, 120 OHM
ACT	R39005	1.00	4702-0151-003	RES, 5, 1/4W, 150 OHM
ACT	R39006	2.00	4701-0221-003	RES, 5, 1/8W, 220 OHM
ACT	R39007	1.00	4701-0220-003	RES, 5, 1/8W, 22 OHM
ACT	R39008	-.--	4701-0221-003	RES, 5, 1/8W, 220 OHM
ACT	U39001	1.00	5050-2501-100	IC,MSA-0335-22,IC AMP

ASSY NO	REVISION	DESCRIPTION	LAST ECN	DATE INC
7010-4930-100	C4	PCB ASSY,DET BUFFER-PWR CKT	8210	01/11/86

STAT	REF DES	QTY	COMP. PART NO.	DESCRIPTION
ACT		.00	DWG-0000-4910-100	DWG SCHEM,DET BUFFER & MONITOR
ACT	*01	1.00	1700-4920-100	PC BD,DET BUFFER-PWR CKT-PULSE
ACT	C17001	7.00	1521-0000-008	CAP,UF .10, 50V,DIP,Z5U
ACT	C17002	-.--	1521-0000-008	CAP,UF .10, 50V,DIP,Z5U
ACT	C17003	1.00	1506-0220-017	CAP,PF 22, 200V,NPO, 5
ACT	C17004	1.00	1507-0336-021	CAP,UF 33, 20V,TANT, 20
ACT	C17005	-.--	1521-0000-008	CAP,UF .10, 50V,DIP,Z5U
ACT	C17006	1.00	1507-0156-021	CAP,UF 15, 20V,TANT, 20
ACT	C17007	-.--	1521-0000-008	CAP,UF .10, 50V,DIP,Z5U
ACT	C17008	-.--	1521-0000-008	CAP,UF .10, 50V,DIP,Z5U
ACT	C17009	1.00	1506-0221-017	CAP,PF 220, 200V,NPO, 5
ACT	C17010	2.00	1507-0105-118	CAP,UF 1.0, 35V,TANT, 5
ACT	C17011	-.--	1507-0105-118	CAP,UF 1.0, 35V,TANT, 5
ACT	C17012	1.00	1507-0685-018	CAP,UF 6.8, 35V,TANT, 20
ACT	C17013	- --	1521-0000-008	CAP,UF .10, 50V,DIP,Z5U
ACT	C17014	-.--	1521-0000-008	CAP,UF .10, 50V,DIP,Z5U
ACT	C17015	1.00	1506-0471-017	CAP,PF 470, 200V,NPO, 5
ACT	C17016	1.00	1506-0150-017	CAP,PF 15, 200V,NPO, 5
ACT	CR17001	3.00	4815-0000-003	DIODE, 1N4148 ,SIGNAL, 75PRV
ACT	CR17002	1.00	4818-0000-015	DIODE,329C,6.9V ZENER REF
ACT	CR17003	-.--	4815-0000-003	DIODE, 1N4148 ,SIGNAL, 75PRV
ACT	CR17004	-.--	4815-0000-003	DIODE, 1N4148 ,SIGNAL, 75PRV
ACT	J17001	4.00	2200-2010-400	CONN,M SMB,PC MTG,STR, .453LG
ACT	J17002	1.00	2200-1920-100	CONN,M SMA,PCM,STR,.375 LG
ACT	J17003	1.00	2115-1001-006	CONN,MOLEX 22-03-2061
ACT	J17004	-.--	2200-2010-400	CONN,M SMB,PC MTG,STR, .453LG
ACT	J17005	- --	2200-2010-400	CONN,M SMB,PC MTG,STR, .453LG
ACT	J17006	- --	2200-2010-400	CONN,M SMB,PC MTG,STR, .453LG
ACT	Q17001	2.00	4809-0000-005	TRANS,66382 ,NPN HF AMP
ACT	Q17002	- --	4809-0000-005	TRANS,66382 ,NPN HF AMP
ACT	Q17003	3.00	4807-0000-002	TRANS, 2N3905 ,PNP HS SW
ACT	Q17004	2.00	5050-2401-000	TRANS,VN10KM ,N-CH VMOSFET
ACT	Q17005	- --	5050-2401-000	TRANS,VN10KM ,N-CH VMOSFET
ACT	Q17006	1.00	4805-0000-001	TRANS,2N2907A,PNP HS SW (3251)
ACT	Q17007	1.00	4801-0000-001	TRANS, 2N2222 ,NPN HS SW
ACT	Q17008	-.--	4807-0000-002	TRANS, 2N3905 ,PNP HS SW
ACT	Q17009	-.--	4807-0000-002	TRANS, 2N3905 ,PNP HS SW
ACT	Q17010	2.00	4807-0000-001	TRANS, 2N3903 ,NPN HS SW
ACT	Q17011	- --	4807-0000-001	TRANS, 2N3903 ,NPN HS SW
ACT	R17001	1.00	4702-0560-003	RES, 5, 1/4W, 56 OHM
ACT	R17002	1.00	4702-0104-003	RES, 5, 1/4W, 100K OHM
ACT	R17003	1.00	4702-0333-003	RES, 5, 1/4W, 33K OHM
ACT	R17004	3.00	4702-0332-003	RES, 5, 1/4W, 3.3K OHM
ACT	R17005	1.00	4752-0501-002	POT, 500 OHM, 62-1-1-501
ACT	R17006	4.00	4702-0471-003	RES, 5, 1/4W, 470 OHM
ACT	R17007	- --	4702-0471-003	RES, 5, 1/4W, 470 OHM
ACT	R17008	3.00	4702-0221-003	RES, 5, 1/4W, 220 OHM
ACT	R17009	1.00	4702-0152-003	RES, 5, 1/4W, 1.5K OHM
ACT	R17010	4.00	4702-0470-003	RES, 5, 1/4W, 47 OHM
ACT	R17011	- --	4702-0470-003	RES, 5, 1/4W, 47 OHM
ACT	R17012	2.00	4702-0221-003	RES, 5, 1/4W, 220 OHM
ACT	R17013	7.00	4702-0102-003	RES, 5, 1/4W, 1.0K OHM

ASSY NO.	REVISION	DESCRIPTION	LAST ECN	DATE INC
7010-4930-100	C4	PCB ASSY,DET BUFFER-PWR CKT	8210	01/11/86

STAT	REF DES.	QTY	COMP. PART NO.	DESCRIPTION
ACT	R17014	1.00	4702-0183-003	RES, 5, 1/4W, 18K OHM
ACT	R17015	1.00	4752-0203-002	POT, 20K OHM, 62-1-1-203
ACT	R17016	-.--	4702-0102-003	RES, 5, 1/4W, 1.0K OHM
ACT	R17017	-.--	4702-0102-003	RES, 5, 1/4W, 1.0K OHM
ACT	R17018	2.00	0002-0000-000	*** REF DESIG NOT USED ***
ACT	R17019	-.--	4702-0470-003	RES, 5, 1/4W, 47 OHM
ACT	R17020	-.--	4702-0471-003	RES, 5, 1/4W, 470 OHM
ACT	R17021	4.00	4702-0151-003	RES, 5, 1/4W, 150 OHM
ACT	R17022	-.--	4702-0471-003	RES, 5, 1/4W, 470 OHM
ACT	R17023	-.--	4702-0470-003	RES, 5, 1/4W, 47 OHM
ACT	R17024	-.--	4702-0102-003	RES, 5, 1/4W, 1.0K OHM
ACT	R17025	-.--	4702-0151-003	RES, 5, 1/4W, 150 OHM
ACT	R17026	1.00	4702-0222-003	RES, 5, 1/4W, 2.2K OHM
ACT	R17027	1.00	4702-0182-003	RES, 5, 1/4W, 1.8K OHM
ACT	R17028	1.00	4702-0273-003	RES, 5, 1/4W, 27K OHM
ACT	R17029	-.--	4702-0102-003	RES, 5, 1/4W, 1.0K OHM
ACT	R17030	1.00	4702-0392-003	RES, 5, 1/4W, 3.9K OHM
ACT	R17031	1.00	4702-0472-003	RES, 5, 1/4W, 4.7K OHM
ACT	R17032	1.00	4702-0685-003	RES, 5, 1/4W, 6.8MEG OHM
ACT	R17033	1.00	4702-0475-003	RES, 5, 1/4W, 4.7MEG OHM
ACT	R17034	-.--	4702-0102-003	RES, 5, 1/4W, 1.0K OHM
ACT	R17035	-.--	4702-0221-003	RES, 5, 1/4W, 220 OHM
ACT	R17036	-.--	4702-0102-003	RES, 5, 1/4W, 1.0K OHM
ACT	R17037	1.00	4702-0101-003	RES, 5, 1/4W, 100 OHM
ACT	R17038	2.00	4702-0270-003	RES, 5, 1/4W, 27 OHM
ACT	R17039	-.--	4702-0151-003	RES, 5, 1/4W, 150 OHM
ACT	R17040	-.--	4702-0270-003	RES, 5, 1/4W, 27 OHM
ACT	R17041	-.--	4702-0151-003	RES, 5, 1/4W, 150 OHM
ACT	R17042	-.--	4702-0332-003	RES, 5, 1/4W, 3.3K OHM
ACT	R17043	-.--	4702-0332-003	RES, 5, 1/4W, 3.3K OHM
ACT	R17044	1.00	4706-4321-001	RES, 1, 1/4W, 4.32K OHM
ACT	R17045	1.00	4702-0680-003	RES, 5, 1/4W, 68 OHM
ACT	R17046	1.00	4702-0122-003	RES, 5, 1/4W, 1.2K OHM
ACT	R17047	1.00	4702-0823-003	RES, 5, 1/4W, 82K OHM
ACT	U17001	1.00	3223-0001-000	IC,710C,DIFF VOLT COMPARATOR
ACT	U17002	1.00	3130-0000-017	IC,74121,MONOSTA MULTIVIBRATOR
ACT	U17003	1.00	3130-0000-025	IC,741C,GENERAL PURPOSE OP AMP
ACT	U17004	1.00	3133-0000-024	IC,3130,BIMOS OP AMP,PLAST DIP
ACT	U17005	1.00	3132-0000-001	IC,74S00,QUAD 2-INPUT NAND

ASSY NO.	REVISION	DESCRIPTION	LAST ECN	DATE INC
7010-4930-300	D	PCB ASSY,RANGE BOARD #1	10864	03/22/88

STAT	REF.DES.	QTY	COMP. PART NO.	DESCRIPTION
ACT		.00	DWG-0000-4910-300	DWG SCHEM,RANGE BOARD #1
ACT	*01	1.00	1700-4920-300	PC BD,RANGE BOARD #1
ACT	*02	.30	6011-0018-001	TUBING,TF,26 AWG,NATURAL,TW
ACT	C19001	5.00	1506-0102-017	CAP,PF 1000, 100V,NPO, 5
ACT	C19002	3.00	1506-0100-017	CAP,PF 10, 100V,NPO, 5
ACT	C19003	-.--	1506-0100-017	CAP,PF 10, 100V,NPO, 5
ACT	C19004	2.00	1506-0050-017	CAP,PF 5.5 100V,NPO 5
ACT	C19005	-.--	1506-0100-017	CAP,PF 10, 100V,NPO, 5
ACT	C19006	-.--	1506-0050-017	CAP,PF 5.5 100V,NPO 5
ACT	C19007	7.00	1501-0103-005	CAP,UF .010, 50V,DISC, 10
ACT	C19008	-.--	1501-0103-005	CAP,UF .010, 50V,DISC, 10
ACT	C19009	-.--	1506-0102-017	CAP,PF 1000, 100V,NPO, 5
ACT	C19010	-.--	1501-0103-005	CAP,UF .010, 50V,DISC, 10
ACT	C19011	-.--	1501-0103-005	CAP,UF .010, 50V,DISC, 10
ACT	C19012	-.--	1506-0102-017	CAP,PF 1000, 100V,NPO, 5
ACT	C19013	-.--	1506-0102-017	CAP,PF 1000, 100V,NPO, 5
ACT	C19014	1.00	1506-0470-017	CAP,PF 47, 100V,NPO 5
ACT	C19015	1.00	1506-0820-017	CAP,PF 82, 100V,NPO, 5
ACT	C19016	-.--	1501-0103-005	CAP,UF .010, 50V,DISC, 10
ACT	C19017	1.00	1506-0471-017	CAP,PF 470, 100V,NPO, 5
ACT	C19018	30.00	1521-0000-008	CAP,UF .10, 50V,DIP,Z5U
ACT	C19019	-.--	1501-0103-005	CAP,UF .010, 50V,DISC, 10
ACT	C19020	2.00	1506-0681-017	CAP,PF 680, 100V,NPO, 5
ACT	C19021	-.--	1506-0681-017	CAP,PF 680, 100V,NPO, 5
ACT	C19022	-.--	1506-0102-017	CAP,PF 1000, 100V,NPO, 5
ACT	C19023	-.--	1501-0103-005	CAP,UF .010, 50V,DISC, 10
ACT	C19024	1.00	1580-4700-045	CAP,UF 47, 10V,ELE, 30
ACT	C19025	1.00	1580-1000-350	CAP,UF 10, 35V,ELE, 30
ACT	C19026	2.00	1506-0220-017	CAP,PF 22, 100V,NPO, 5
ACT	C19027	-.--	1506-0220-017	CAP,PF 22, 100V,NPO, 5
ACT	C19028	-.--	1521-0000-008	CAP,UF .10, 50V,DIP,Z5U
ACT	C19029	-.--	1521-0000-008	CAP,UF .10, 50V,DIP,Z5U
ACT	C19030	-.--	1521-0000-008	CAP,UF .10, 50V,DIP,Z5U
ACT	C19031	-.--	1521-0000-008	CAP,UF .10, 50V,DIP,Z5U
ACT	C19032	-.--	1521-0000-008	CAP,UF .10, 50V,DIP,Z5U
ACT	C19033	-.--	1521-0000-008	CAP,UF .10, 50V,DIP,Z5U
ACT	C19034	-.--	1521-0000-008	CAP,UF .10, 50V,DIP,Z5U
ACT	C19035	-.--	1521-0000-008	CAP,UF .10, 50V,DIP,Z5U
ACT	C19036	-.--	1521-0000-008	CAP,UF .10, 50V,DIP,Z5U
ACT	C19037	-.--	1521-0000-008	CAP,UF .10, 50V,DIP,Z5U
ACT	C19038	-.--	1521-0000-008	CAP,UF .10, 50V,DIP,Z5U
ACT	C19039	-.--	1521-0000-008	CAP,UF .10, 50V,DIP,Z5U
ACT	C19040	-.--	1521-0000-008	CAP,UF .10, 50V,DIP,Z5U
ACT	C19041	-.--	1521-0000-008	CAP,UF .10, 50V,DIP,Z5U
ACT	C19042	-.--	1521-0000-008	CAP,UF .10, 50V,DIP,Z5U
ACT	C19043	-.--	1521-0000-008	CAP,UF .10, 50V,DIP,Z5U
ACT	C19044	-.--	1521-0000-008	CAP,UF .10, 50V,DIP,Z5U
ACT	C19045	-.--	1521-0000-008	CAP,UF .10, 50V,DIP,Z5U
ACT	C19046	-.--	1521-0000-008	CAP,UF .10, 50V,DIP,Z5U
ACT	C19047	-.--	1521-0000-008	CAP,UF .10, 50V,DIP,Z5U
ACT	C19048	-.--	1521-0000-008	CAP,UF .10, 50V,DIP,Z5U
ACT	C19049	-.--	1521-0000-008	CAP,UF .10, 50V,DIP,Z5U

ASSY NO.	REVISION	DESCRIPTION	LAST ECN	DATE INC
7010-4930-300	D	PCB ASSY,RANGE BOARD #1	10864	03/22/88

STAT	REF.DES.	QTY	COMP. PART NO.	DESCRIPTION
ACT	C19050	-.--	1521-0000-008	CAP,UF .10, 50V,DIP,Z5U
ACT	C19051	-.--	1521-0000-008	CAP,UF .10, 50V,DIP,Z5U
ACT	C19052	-.--	1521-0000-008	CAP,UF .10, 50V,DIP,Z5U
ACT	C19053	-.--	1521-0000-008	CAP,UF .10, 50V,DIP,Z5U
ACT	C19054	-.--	1521-0000-008	CAP,UF .10, 50V,DIP,Z5U
ACT	C19055	-.--	1521-0000-008	CAP,UF .10, 50V,DIP,Z5U
ACT	C19056	-.--	1521-0000-008	CAP,UF .10, 50V,DIP,Z5U
ACT	CR19001	4.00	4815-0000-003	DIODE, 1N4148 ,SIGNAL, 75PRV
ACT	CR19002	-.--	4815-0000-003	DIODE, 1N4148 ,SIGNAL, 75PRV
ACT	CR19003	-.--	4815-0000-003	DIODE, 1N4148 ,SIGNAL, 75PRV
ACT	CR19004	-.--	4815-0000-003	DIODE, 1N4148 ,SIGNAL, 75PRV
ACT	J19002	1.00	2129-1001-034	CONN,ANSLEY 609-3427
ACT	L19002	1.00	1800-7629-300	XFMR,.1UH,108-177MHZ,BLUE
ACT	P30001	1.00	6045-4980-200	RBN CA ASSY,RANGE #1- RANGE #2
ACT	Q19001	6.00	4807-0000-002	TRANS, 2N3905 ,PNP HS SW
ACT	Q19002	3.00	4809-0000-005	TRANS,66382 ,NPN HF AMP
ACT	Q19003	-.--	4809-0000-005	TRANS,66382 ,NPN HF AMP
ACT	Q19004	-.--	4809-0000-005	TRANS,66382 ,NPN HF AMP
ACT	Q19005	-.--	4807-0000-002	TRANS, 2N3905 ,PNP HS SW
ACT	Q19006	-.--	4807-0000-002	TRANS, 2N3905 ,PNP HS SW
ACT	Q19007	-.--	4807-0000-002	TRANS, 2N3905 ,PNP HS SW
ACT	Q19008	-.--	4807-0000-002	TRANS, 2N3905 ,PNP HS SW
ACT	Q19009	-.--	4807-0000-002	TRANS, 2N3905 ,PNP HS SW
ACT	Q19010	2.00	4801-0000-001	TRANS, 2N2222 ,NPN HS SW
ACT	Q19011	-.--	4801-0000-001	TRANS, 2N2222 ,NPN HS SW
ACT	R19001	4.00	4702-0102-003	RES, 5, 1/4W, 1.0K OHM
ACT	R19002	1.00	4702-0272-003	RES, 5, 1/4W, 2.7K OHM
ACT	R19003	9.00	4702-0471-003	RES, 5, 1/4W, 470 OHM
ACT	R19004	-.--	4702-0471-003	RES, 5, 1/4W, 470 OHM
ACT	R19005	2.00	4702-0682-003	RES, 5, 1/4W, 6.8K OHM
ACT	R19006	7.00	4702-0101-003	RES, 5, 1/4W, 100 OHM
ACT	R19007	-.--	4702-0102-003	RES, 5, 1/4W, 1.0K OHM
ACT	R19008	3.00	4702-0473-003	RES, 5, 1/4W, 47K OHM
ACT	R19009	-.--	4702-0471-003	RES, 5, 1/4W, 470 OHM
ACT	R19010	-.--	4702-0101-003	RES, 5, 1/4W, 100 OHM
ACT	R19011	-.--	4702-0102-003	RES, 5, 1/4W, 1.0K OHM
ACT	R19012	-.--	4702-0473-003	RES, 5, 1/4W, 47K OHM
ACT	R19013	3.00	4702-0680-003	RES, 5, 1/4W, 68 OHM
ACT	R19014	-.--	4702-0471-003	RES, 5, 1/4W, 470 OHM
ACT	R19015	-.--	4702-0471-003	RES, 5, 1/4W, 470 OHM
ACT	R19016	-.--	4702-0473-003	RES, 5, 1/4W, 47K OHM
ACT	R19017	-.--	4702-0471-003	RES, 5, 1/4W, 470 OHM
ACT	R19018	1.00	4702-0822-003	RES, 5, 1/4W, 8.2K OHM
ACT	R19019	-.--	4702-0101-003	RES, 5, 1/4W, 100 OHM
ACT	R19020	-.--	4702-0102-003	RES, 5, 1/4W, 1.0K OHM
ACT	R19021	1.00	4702-0222-003	RES, 5, 1/4W, 2.2K OHM
ACT	R19022	1.00	4702-0223-003	RES, 5, 1/4W, 22K OHM
ACT	R19023	-.--	4702-0101-003	RES, 5, 1/4W, 100 OHM
ACT	R19024	-.--	4702-0101-003	RES, 5, 1/4W, 100 OHM
ACT	R19026	-.--	4702-0471-003	RES, 5, 1/4W, 470 OHM
ACT	R19027	-.--	4702-0471-003	RES, 5, 1/4W, 470 OHM
ACT	R19028	-.--	4702-0680-003	RES, 5, 1/4W, 68 OHM

ASSY NO	REVISION	DESCRIPTION	LAST ECN	DATE INC
7010-4930-300	D	PCB ASSY,RANGE BOARD #1	10864	03/22/88

STAT	REF.DES.	QTY	COMP. PART NO.	DESCRIPTION
ACT	R19029	-.--	4702-0101-003	RES, 5, 1/4W, 100 OHM
ACT	R19030	2.00	4702-0561-003	RES, 5, 1/4W, 560 OHM
ACT	R19031	4.00	4702-0221-003	RES, 5, 1/4W, 220 OHM
ACT	R19032	2.00	4702-0182-003	RES, 5, 1/4W, 1.8K OHM
ACT	R19033	5.00	4702-0331-003	RES, 5, 1/4W, 330 OHM
ACT	R19034	-.--	4702-0331-003	RES, 5, 1/4W, 330 OHM
ACT	R19035	-.--	4702-0331-003	RES, 5, 1/4W, 330 OHM
ACT	R19036	-.--	4702-0221-003	RES, 5, 1/4W, 220 OHM
ACT	R19037	1.00	4702-0181-003	RES, 5, 1/4W, 180 OHM
ACT	R19038	-.--	4702-0471-003	RES, 5, 1/4W, 470 OHM
ACT	R19039	-.--	4702-0680-003	RES, 5, 1/4W, 68 OHM
ACT	R19040	-.--	4702-0101-003	RES, 5, 1/4W, 100 OHM
ACT	R19041	-.--	4702-0561-003	RES, 5, 1/4W, 560 OHM
ACT	R19042	-.--	4702-0221-003	RES, 5, 1/4W, 220 OHM
ACT	R19043	-.--	4702-0331-003	RES, 5, 1/4W, 330 OHM
ACT	R19044	-.--	4702-0331-003	RES, 5, 1/4W, 330 OHM
ACT	R19045	3.00	4702-0103-003	RES, 5, 1/4W, 10K OHM
ACT	R19046	-.--	4702-0221-003	RES, 5, 1/4W, 220 OHM
ACT	R19047	1.00	4752-0201-002	POT, 200 OHM, 62-1-1-201
ACT	R19048	-.--	4702-0103-003	RES, 5, 1/4W, 10K OHM
ACT	R19049	-.--	4702-0103-003	RES, 5, 1/4W, 10K OHM
ACT	R19050	2.00	4702-0332-003	RES, 5, 1/4W, 3.3K OHM
ACT	R19051	-.--	4702-0182-003	RES, 5, 1/4W, 1.8K OHM
ACT	R19052	-.--	4702-0332-003	RES, 5, 1/4W, 3.3K OHM
ACT	R19053	-.--	4702-0682-003	RES, 5, 1/4W, 6.8K OHM
ACT	TP19001	1.00	2114-0000-007	POST,GANG,PCB,.025SQ,.443LG
ACT	U19001	1.00	3134-0000-017	IC,12013,D/10/11 PRESCALER
ACT	U19002	1.00	3211-3390-000	IC,74LS390,DUAL DECADE COUNTER
ACT	U19003	1.00	3131-0000-028	IC,74LS90,DECADE COUNTER
ACT	U19004	1.00	3134-0000-008	IC,10116,TRIPLE LINE RECEIVER
ACT	U19005	2.00	3213-0003-000	IC,10137,UNIV DECADE COUNTER
ACT	U19006	10.00	3131-0000-029	IC,74LS190,BCD SYN U/D COUNTER
ACT	U19007	-.--	3131-0000-029	IC,74LS190,BCD SYN U/D COUNTER
ACT	U19008	-.--	3131-0000-029	IC,74LS190,BCD SYN U/D COUNTER
ACT	U19009	-.--	3131-0000-029	IC,74LS190,BCD SYN U/D COUNTER
ACT	U19010	2.00	3131-0000-032	IC,74LS02,QUAD 2-INPUT NOR
ACT	U19011	4.00	3131-0000-027	IC,74LS30,8-INPUT NAND
ACT	U19012	-.--	3131-0000-027	IC,74LS30,8-INPUT NAND
ACT	U19013	4.00	3131-0000-044	IC,74LS00,QUAD 2-INPUT NAND
ACT	U19014	5.00	3132-0000-002	IC,74S112,DUAL JK FLIP-FLOP
ACT	U19015	-.--	3131-0000-029	IC,74LS190,BCD SYN U/D COUNTER
ACT	U19016	-.--	3132-0000-002	IC,74S112,DUAL JK FLIP-FLOP
ACT	U19017	-.--	3131-0000-044	IC,74LS00,QUAD 2-INPUT NAND
ACT	U19018	-.--	3131-0000-044	IC,74LS00,QUAD 2-INPUT NAND
ACT	U19019	-.--	3213-0003-000	IC,10137,UNIV DECADE COUNTER
ACT	U19020	-.--	3131-0000-029	IC,74LS190,BCD SYN U/D COUNTER
ACT	U19021	-.--	3131-0000-029	IC,74LS190,BCD SYN U/D COUNTER
ACT	U19022	-.--	3131-0000-029	IC,74LS190,BCD SYN U/D COUNTER
ACT	U19023	-.--	3131-0000-029	IC,74LS190,BCD SYN U/D COUNTER
ACT	U19024	-.--	3131-0000-032	IC,74LS02,QUAD 2-INPUT NOR
ACT	U19025	-.--	3131-0000-027	IC,74LS30,8-INPUT NAND
ACT	U19026	-.--	3131-0000-027	IC,74LS30,8-INPUT NAND

ASSY NO.	REVISION	DESCRIPTION	LAST ECN	DATE INC
7010-4930-300	D	PCB ASSY,RANGE BOARD #1	10864	03/22/88

STAT	REF DES.	QTY	COMP. PART NO.	DESCRIPTION
ACT	U19027	1.00	3131-0000-006	IC,74LS76A,DUAL JK FLIP-FLOP
ACT	U19028	-.--	3132-0000-002	IC,74S112,DUAL JK FLIP-FLOP
ACT	U19029	-.--	3131-0000-044	IC,74LS00,QUAD 2-INPUT NAND
ACT	U19030	-.--	3131-0000-029	IC,74LS190,BCD SYN U/D COUNTER
ACT	U19031	-.--	3132-0000-002	IC,74S112,DUAL JK FLIP-FLOP
ACT	U19032	-.--	3132-0000-002	IC,74S112,DUAL JK FLIP-FLOP
ACT	Y19001	1.00	2363-0011-000	XTAL,100.000000MHZ,5 S,HC-18/U
ACT	Y19002	1.00	2363-0036-000	XTAL,8.093000MHZ,F P,HC-18/U 3

ASSY NO.	REVISION	DESCRIPTION	LAST ECN	DATE INC
7010-4930-500	C4	PCB ASSY,PRESCALER	10168	08/11/87

STAT	REF.DES.	QTY	COMP. PART NO.	DESCRIPTION
ACT		.33	6003-0000-001	WIRE,HOOK,TFE,26GA, 7S,BLACK
ACT		.45	6003-0000-004	WIRE,HOOK,TFE,26GA, 7S,ORANGE
ACT		.42	6003-0000-010	WIRE,HOOK,TFE,26GA, 7S,WHITE
ACT		.38	6003-0000-011	WIRE,HOOK,TFE,26GA, 7S,WHT/BLK
ACT		.45	6003-0000-012	WIRE,HOOK,TFE,26GA, 7S,WHT/BRN
ACT		.00	DWG-0000-4910-500	DWG SCHEM,PRESCALER BOARD
ACT	*01	1.00	1700-4920-500	PC BD,PRESCALER
ACT	*02	1.00	2506-4951-200	PLATE,MKR/PRESCALER PCB MTG
ACT	*03	1.00	1400-2516-400	BRACKET MOUNTING 1
ACT	*04	1.00	2803-0250-006	SCREW,4-40 X 1/4 PPHM
ACT	*05	2.00	2803-0313-006	SCREW,4-40 X 5/16 PPHM
ACT	*07	1.00	2840-0000-003	WASHER,LOCK,INT TOOTH,4
ACT	*11	.25	6011-0022-001	TUBING,TF,24 AWG,NATURAL,TW
ACT	*13	1.00	2109-0000-007	CLAMP CABLE TYRAP TY34M.8
ACT	*16	5.00	2114-9001-001	CONTACT PIN,26-22GA,SYM001T0.6
ACT	*17	.10	6012-0106-200	TUBING,PVC-105,10 AWG,BLACK
ACT	*18	.10	6010-0125-100	TUBING,HS, 1/8 ID,CLEAR
ACT	*19	.00	1051-5201-025	TAPE,MYLAR,1/4 IN WIDE, M54
ACT	*20	.00	1050-0000-075	WIRE,BUS,TINNED COPPER,26GA
ACT	*21	.00	1050-0000-073	WIRE,BUS,TINNED COPPER,22GA
ACT	C23001	1.00	1506-0050-017	CAP,PF 5.5 100V,NPO 5
ACT	C23002	2.00	1523-0000-002	CAP,PF 1800, 50V,CHIP,X7R
ACT	C23003	1.00	1506-0220-017	CAP,PF 22, 100V,NPO, 5
ACT	C23004	-.--	1523-0000-002	CAP,PF 1800, 50V,CHIP,X7R
ACT	C23006	8.00	1506-0222-017	CAP PF 2200 50V NPO
ACT	C23007	-.--	1506-0222-017	CAP PF 2200 50V NPO
ACT	R23014	-.--	4702-0471-003	RES, 5, 1/4W, 470 OHM
ACT	R23015	2.00	4702-0101-003	RES, 5, 1/4W, 100 OHM
ACT	R23016	2.00	4702-0470-003	RES, 5, 1/4W, 47 OHM
ACT	R23017	-.--	4702-0681-003	RES, 5, 1/4W, 680 OHM
ACT	R23018	-.--	4702-0681-003	RES, 5, 1/4W, 680 OHM
ACT	R23019	-.--	4702-0680-003	RES, 5, 1/4W, 68 OHM
ACT	R23020	-.--	4702-0473-003	RES, 5, 1/4W, 47K OHM
ACT	R23021	-.--	4702-0471-003	RES, 5, 1/4W, 470 OHM
ACT	R23022	-.--	4702-0101-003	RES, 5, 1/4W, 100 OHM
ACT	R23023	-.--	4702-0470-003	RES, 5, 1/4W, 47 OHM
ACT	R23024	-.--	4702-0681-003	RES, 5, 1/4W, 680 OHM
ACT	R23025	-.--	4702-0681-003	RES, 5, 1/4W, 680 OHM
ACT	R23026	-.--	4702-0680-003	RES, 5, 1/4W, 68 OHM
ACT	U23001	-.--	0002-0000-000	*** REF DESIG NOT USED ***
ACT	U23002	2.00	3213-1200-900	IC,12009,OR12509,D/5/6,PRESCL.
ACT	U23003	-.--	3213-1200-900	IC,12009,OR12509,D/5/6,PRESCL.
ACT	U23004	1.00	3131-0000-044	IC,74LS00,QUAD 2-INPUT NAND
ACT	U23005	2.00	3134-0000-017	IC,12013,D/10/11 PRESCALER
ACT	U23006	-.--	3134-0000-017	IC,12013,D/10/11 PRESCALER
ACT	U23007	1.00	3213-0861-100	IC,8611B,1.3-1.5 GHZ N/4

ASSY NO.	REVISION	DESCRIPTION	LAST ECN	DATE INC
7010-4930-500	C4	PCB ASSY,PRESCALER	10168	08/11/87

STAT	REF.DES.	QTY	COMP. PART NO.	DESCRIPTION
ACT	J23002	3.00	6042-4983-100	COAX ASSY,SR.086,PRESCALER.80L
ACT	J23003	-.--	6042-4983-100	COAX ASSY,SR.086,PRESCALER.80L
ACT	J23004	-.--	6042-4983-100	COAX ASSY,SR.086,PRESCALER.80L
ACT	J23005	-.--	0002-0000-000	*** REF DESIG NOT USED ***
ACT	J23006	-.--	0002-0000-000	*** REF DESIG NOT USED ***
ACT	J23007	1.00	2115-9001-005	CONN,RECT.098 RCPT 5-P,SMR05VB
ACT	L23001	4.00	1801-0229-001	IND, 2.2 UH,.4 OHM,1025-28
ACT	L23002	-.--	1801-0229-001	IND, 2.2 UH,.4 OHM,1025-28
ACT	L23003	-.--	1801-0229-001	IND, 2.2 UH,.4 OHM,1025-28
ACT	L23004	-.--	1801-0229-001	IND, 2.2 UH,.4 OHM,1025-28
ACT	Q23001	1.00	5010-0203-100	TRANS,HXTR-3101,NPN HF AMP
ACT	Q23002	2.00	4809-0000-005	TRANS,66382 ,NPN HF AMP
ACT	Q23003	-.--	4809-0000-005	TRANS,66382 ,NPN HF AMP
ACT	R23001	1.00	4701-0330-003	RES, 5, 1/8W, 33 OHM
ACT	R23002	1.00	4701-0153-003	RES, 5, 1/8W, 15K OHM
ACT	R23003	1.00	4702-0271-003	RES, 5, 1/4W, 270 OHM
ACT	R23004	3.00	4702-0471-003	RES, 5, 1/4W, 470 OHM
ACT	R23005	5.00	4702-0680-003	RES, 5, 1/4W, 68 OHM
ACT	R23006	7.00	4702-0681-003	RES, 5, 1/4W, 680 OHM
ACT	R23007	-.--	4702-0681-003	RES, 5, 1/4W, 680 OHM
ACT	R23008	-.--	4702-0681-003	RES, 5, 1/4W, 680 OHM
ACT	R23009	1.00	4702-0100-003	RES, 5, 1/4W, 10 OHM
ACT	R23010	1.00	4702-0152-003	RES, 5, 1/4W, 1.5K OHM
ACT	R23011	-.--	4702-0680-003	RES, 5, 1/4W, 68 OHM
ACT	R23012	-.--	4702-0680-003	RES, 5, 1/4W, 68 OHM
ACT	R23013	2.00	4702-0473-003	RES, 5, 1/4W, 47K OHM
ACT	C23008	-.--	1506-0222-017	CAP PF 2200 50V NPO
ACT	C23009	-.--	1506-0222-017	CAP PF 2200 50V NPO
ACT	C23010	2.00	1506-0101-017	CAP,PF, 100, 100V,NPO, 5
ACT	C23011	2.00	1501-0103-005	CAP,UF .010, 50V,DISC, 10
ACT	C23012	2.00	1506-0102-017	CAP,PF 1000, 100V,NPO, 5
ACT	C23013	-.--	1506-0222-017	CAP PF 2200 50V NPO
ACT	C23014	-.--	1506-0222-017	CAP PF 2200 50V NPO
ACT	C23015	-.--	1506-0101-017	CAP,PF, 100, 100V,NPO, 5
ACT	C23016	-.--	1501-0103-005	CAP,UF .010, 50V,DISC, 10
ACT	C23017	-.--	1506-0102-017	CAP,PF 1000, 100V,NPO, 5
ACT	C23018	-.--	1506-0222-017	CAP PF 2200 50V NPO
ACT	C23019	-.--	1506-0222-017	CAP PF 2200 50V NPO
ACT	C23020	1.00	1507-0105-118	CAP,UF 1.0, 35V,TANT, 5
ACT	C23021	7.00	0002-0000-000	*** REF DESIG NOT USED ***
ACT	C23022	-.--	0002-0000-000	*** REF DESIG NOT USED ***
ACT	C23023	-.--	0002-0000-000	*** REF DESIG NOT USED ***
ACT	C23024	-.--	0002-0000-000	*** REF DESIG NOT USED ***
ACT	CR23001	4.00	4816-0000-001	DIODE,5082-2800,S BAR, 70VBR
ACT	CR23002	-.--	4816-0000-001	DIODE,5082-2800,S BAR, 70VBR
ACT	CR23003	-.--	4816-0000-001	DIODE,5082-2800,S BAR, 70VBR
ACT	CR23004	-.--	4816-0000-001	DIODE,5082-2800,S BAR, 70VBR
ACT	FL23001	2.00	5801-0000-006	FILTER,EMI/RFI,1500PF,8-32 DIA
ACT	FL23002	-.--	5801-0000-006	FILTER,EMI/RFI,1500PF,8-32 DIA
ACT	FL23003	2.00	1526-0000-006	CAP,PF 100, 200V,FEEDTHRU
ACT	FL23004	-.--	1526-0000-006	CAP,PF 100, 200V,FEEDTHRU
ACT	GL23001	1.00	2850-0000-031	LUG,GND,4

ASSY NO.	REVISION	DESCRIPTION	LAST ECN	DATE INC
7010-2517-800	C1	COUNTER DISPLAY PC BD ASSY RD	10497	11/06/87

STAT	REF.DES	QTY	COMP. PART NO.	DESCRIPTION
ACT		.00	DWG-0000-2510-200	SCHEM,COUNTER LOGIC/GATING/DIS
ACT	*01	1.00	1700-2505-100	BD PC 1
ACT	*02	3.00	3101-0000-001	SOCKET SPERRY CS352
ACT	R26001	6.00	4702-0222-003	RES, 5, 1/4W, 2.2K OHM
ACT	R26002	6.00	4702-0125-003	RES, 5, 1/4W, 1.2MEG OHM
ACT	R26003	-.--	4702-0125-003	RES, 5, 1/4W, 1.2MEG OHM
ACT	R26004	-.--	4702-0222-003	RES, 5, 1/4W, 2.2K OHM
ACT	R26005	-.--	4702-0222-003	RES, 5, 1/4W, 2.2K OHM
ACT	R26006	-.--	4702-0125-003	RES, 5, 1/4W, 1.2MEG OHM
ACT	P26007	-.--	4702-0125-003	RES, 5, 1/4W, 1.2MEG OHM
ACT	R26008	-.--	4702-0222-003	RES, 5, 1/4W, 2.2K OHM
ACT	R26009	-.--	4702-0222-003	RES, 5, 1/4W, 2.2K OHM
ACT	R26010	-.--	4702-0125-003	RES, 5, 1/4W, 1.2MEG OHM
ACT	R26011	-.--	4702-0125-003	RES, 5, 1/4W, 1.2MEG OHM
ACT	R26012	-.--	4702-0222-003	RES, 5, 1/4W, 2.2K OHM

ASSY NO.	REVISION	DESCRIPTION	LAST ECN	DATE INC
7010-4930-900	C1	PCB ASSY,RANGE DISCRETE	10515	11/19/87

STAT	REF.DES.	QTY	COMP. PART NO.	DESCRIPTION
ACT		.00	DWG-0000-4910-900	DWG SCHEM,RANGE DISCRETE SW BD
ACT	*01	1.00	1700-4920-900	PC BD,RANGE DISCCRETE
ACT	*02	5.00	2800-3065-300	SPACER,AL,.37500,.272IO,.062LG
ACT	CR22001	1.00	4818-0000-020	OPTO LED,HLMP-1301,RED
ACT	J22001	1.00	2129-1001-034	CONN,ANSLEY 609-3427
ACT	R22001	1.00	4702-0331-003	RES, 5, 1/4W, 330 OHM
ACT	R22002	3.00	4750-7615-100	POT, 10K OHM, RV6NAYSD103A .59
ACT	R22003	-.--	4750-7615-100	POT, 10K OHM, RV6NAYSD103A .59
ACT	R22004	-.--	4750-7615-100	POT, 10K OHM, RV6NAYSD103A .59
ACT	SW22001	3.00	5111-5013-000	SWITCH,ROT,PCM,SP,12POS, 30TA
ACT	SW22002	2.00	5120-0012-000	SWITCH,TOG,SPDT,ON-NONE-ON
ACT	SW22003	-.--	5111-5013-000	SWITCH,ROT,PCM,SP,12POS, 30TA
ACT	SW22004	-.--	5120-0012-000	SWITCH,TOG,SPDT,ON-NONE-ON
ACT	SW22005	-.--	5111-5013-000	SWITCH,ROT,PCM,SP,12POS, 30TA

ASSY NO.	REVISION	DESCRIPTION	LAST ECN	DATE INC
7010-4931-000	C4	PCB ASSY,RANGE BOARD #2	10457	11/03/87

STAT	REF.DES.	QTY	COMP. PART NO.	DESCRIPTION
ACT		.00	DWG-0000-4911-000	DWG SCHEM,RANGE BOARD #2
ACT	*01	1.00	1700-4921-000	PC BD,RANGE BOARD #2
ACT	C30001	8.00	1521-0000-008	CAP,UF .10, 50V,DIP,Z5U
ACT	C30002	5.00	1506-0680-017	CAP,PF 68, 100V,NPO, 5
ACT	C30003	2.00	1506-0102-017	CAP,PF 1000, 100V,NPO, 5
ACT	C30004	3.00	1502-0103-010	CAP,UF .010, 50V,PC, 2
ACT	C30005	3.00	1502-0104-010	CAP,UF .10, 50V,PC, 5
ACT	C30006	2.00	1502-0105-002	CAP,UF, 1.0, 50V,MPC 2
ACT	C30007	2.00	1501-0103-005	CAP,UF .010, 50V,DISC, 10
ACT	C30008	-.--	1521-0000-008	CAP,UF .10, 50V,DIP,Z5U
ACT	C30009	-.--	1521-0000-008	CAP,UF .10, 50V,DIP,Z5U
ACT	C30010	-.--	1506-0680-017	CAP,PF 68, 100V,NPO, 5
ACT	C30011	-.--	1506-0102-017	CAP,PF 1000, 100V,NPO, 5
ACT	C30012	-.--	1502-0103-010	CAP,UF .010, 50V,PC, 2
ACT	C30013	-.--	1502-0104-010	CAP,UF .10, 50V,PC, 5
ACT	C30014	-.--	1502-0105-002	CAP,UF, 1.0, 50V,MPC 2
ACT	C30015	-.--	1501-0103-005	CAP,UF .010, 50V,DISC, 10
ACT	C30016	-.--	1521-0000-008	CAP,UF .10, 50V,DIP,Z5U
ACT	C30017	1.00	1502-0334-012	CAP,UF .33, 50V,MPC, 5
ACT	C30018	7.00	0002-0000-000	*** REF DESIG NOT USED ***
ACT	C30019	-.--	0002-0000-000	*** REF DESIG NOT USED ***
ACT	C30020	-.--	0002-0000-000	*** REF DESIG NOT USED ***
ACT	C30021	1.00	1507-0685-020	CAP,UF 6.8, 15V,TANT, 20
ACT	C30022	-.--	1502-0103-010	CAP,UF .010, 50V,PC, 2
ACT	C30023	-.--	1502-0104-010	CAP,UF .10, 50V,PC, 5
ACT	C30024	-.--	1506-0680-017	CAP,PF 68, 100V,NPO, 5
ACT	C30025	1.00	1507-0476-018	CAP,UF 47, 35V,TANT, 20
ACT	C30026	-.--	1521-0000-008	CAP,UF .10, 50V,DIP,Z5U
ACT	C30027	-.--	1521-0000-008	CAP,UF .10, 50V,DIP,Z5U
ACT	C30028	-.--	1521-0000-008	CAP,UF .10, 50V,DIP,Z5U
ACT	C30029	-.--	1521-0000-008	CAP,UF .10, 50V,DIP,Z5U
ACT	C30030	2.00	1580-4700-215	CAP,UF 47, 25V,ELE, 30
ACT	C30031	-.--	1580-4700-215	CAP,UF 47, 25V,ELE, 30
ACT	C30032	1.00	1580-4702-105	CAP,UF 47, 10V,ELE,RDL
ACT	C30033	-.--	1506-0680-017	CAP,PF 68, 100V,NPO, 5
ACT	C30034	2.00	1506-0180-017	CAP,PF 18, 100V,NPO, 5
ACT	C30035	2.00	1506-0101-017	CAP,PF, 100, 100V,NPO, 5
ACT	C30036	-.--	1506-0680-017	CAP,PF 68, 100V,NPO, 5
ACT	C30037	-.--	1506-0180-017	CAP,PF 18, 100V,NPO, 5
ACT	C30038	1.00	1625-2230-100	CAP,UF .022, 25V,NPO, 5
ACT	C30039	-.--	1506-0101-017	CAP,PF, 100, 100V,NPO, 5
ACT	CR30001	27.00	4815-0000-003	DIODE, 1N4148 ,SIGNAL, 75PRV
ACT	CR30002	-.--	4815-0000-003	DIODE, 1N4148 ,SIGNAL, 75PRV
ACT	CR30003	-.--	4815-0000-003	DIODE, 1N4148 ,SIGNAL, 75PRV
ACT	CR30004	-.--	4815-0000-003	DIODE, 1N4148 ,SIGNAL, 75PRV
ACT	CR30005	-.--	4815-0000-003	DIODE, 1N4148 ,SIGNAL, 75PRV
ACT	CR30006	-.--	4815-0000-003	DIODE, 1N4148 ,SIGNAL, 75PRV
ACT	CR30007	2.00	4818-0000-015	DIODE,329C,6.9V ZENER REF
ACT	CR30008	-.--	4815-0000-003	DIODE, 1N4148 ,SIGNAL, 75PRV
ACT	CR30009	-.--	4815-0000-003	DIODE, 1N4148 ,SIGNAL, 75PRV
ACT	CR30010	-.--	4815-0000-003	DIODE, 1N4148 ,SIGNAL, 75PRV
ACT	CR30011	-.--	4815-0000-003	DIODE, 1N4148 ,SIGNAL, 75PRV

ASSY NO.	REVISION	DESCRIPTION	LAST ECN	DATE INC
7010-4931-000	C4	PCB ASSY,RANGE BOARD #2	10457	11/03/87

STAT	REF.DES.	QTY	COMP. PART NO.	DESCRIPTION
ACT	CR30012	-.--	4815-0000-003	DIODE, 1N4148 ,SIGNAL, 75PRV
ACT	CR30013	-.--	4815-0000-003	DIODE, 1N4148 ,SIGNAL, 75PRV
ACT	CR30014	-.--	4815-0000-003	DIODE, 1N4148 ,SIGNAL, 75PRV
ACT	CR30015	-.--	4815-0000-003	DIODE, 1N4148 ,SIGNAL, 75PRV
ACT	CR30016	-.--	4815-0000-003	DIODE, 1N4148 ,SIGNAL, 75PRV
ACT	CR30017	-.--	4815-0000-003	DIODE, 1N4148 ,SIGNAL, 75PRV
ACT	CR30018	-.--	4815-0000-003	DIODE, 1N4148 ,SIGNAL, 75PRV
ACT	CR30019	-.--	4815-0000-003	DIODE, 1N4148 ,SIGNAL, 75PRV
ACT	CR30020	-.--	4815-0000-003	DIODE, 1N4148 ,SIGNAL, 75PRV
ACT	CR30021	-.--	4815-0000-003	DIODE, 1N4148 ,SIGNAL, 75PRV
ACT	CR30022	-.--	4815-0000-003	DIODE, 1N4148 ,SIGNAL, 75PRV
ACT	CR30023	-.--	4818-0000-015	DIODE,329C,6.9V ZENER REF
ACT	CR30024	-.--	4815-0000-003	DIODE, 1N4148 ,SIGNAL, 75PRV
ACT	CR30025	-.--	0002-0000-000	*** REF DESIG NOT USED ***
ACT	CR30026	-.--	4815-0000-003	DIODE, 1N4148 ,SIGNAL, 75PRV
ACT	CR30027	-.--	0002-0000-000	*** REF DESIG NOT USED ***
ACT	CR30028	-.--	4815-0000-003	DIODE, 1N4148 ,SIGNAL, 75PRV
ACT	CR30029	-.--	4815-0000-003	DIODE, 1N4148 ,SIGNAL, 75PRV
ACT	CR30030	-.--	4815-0000-003	DIODE, 1N4148 ,SIGNAL, 75PRV
ACT	CR30031	-.--	4815-0000-003	DIODE, 1N4148 ,SIGNAL, 75PRV
ACT	J30001	1.00	2129-1001-026	CONN,ANSLEY 609-2327 26-P M
ACT	J30002	1.00	2129-1001-034	CONN,ANSLEY 609-3427
ACT	J30003	1.00	2115-1002-015	CONN,MOLEX 22-05-2151
ACT	J30004	4.00	2200-2010-400	CONN,M SMB,PC MTG,STR,.453LG
ACT	J30005	-.--	2200-2010-400	CONN,M SMB,PC MTG,STR,.453LG
ACT	J30006	1.00	2115-0000-020	WAFER,PCB,.100C,R.A,10-P
ACT	J30007	-.--	2200-2010-400	CONN,M SMB,PC MTG,STR,.453LG
ACT	J30008	-.--	2200-2010-400	CONN,M SMB,PC MTG,STR,.453LG
ACT	K30001	6.00	4501-0000-002	RELAY,DIP REED,SPST, 12VDC,.5A
ACT	K30002	-.--	4501-0000-002	RELAY,DIP REED,SPST, 12VDC,.5A
ACT	K30003	-.--	4501-0000-002	RELAY,DIP REED,SPST, 12VDC,.5A
ACT	K30004	-.--	4501-0000-002	RELAY,DIP REED,SPST, 12VDC,.5A
ACT	K30005	-.--	4501-0000-002	RELAY,DIP REED,SPST, 12VDC,.5A
ACT	K30006	-.--	4501-0000-002	RELAY,DIP REED,SPST, 12VDC,.5A
ACT	L30001	1.00	1801-0688-001	IND, .68UH,.6 OHM,1025-16
ACT	Q30001	15.00	4807-0000-001	TRANS, 2N3903 ,NPN HS SW
ACT	Q30002	9.00	4807-0000-002	TRANS, 2N3905 ,PNP HS SW
ACT	Q30003	-.--	4807-0000-001	TRANS, 2N3903 ,NPN HS SW
ACT	Q30004	-.--	4807-0000-002	TRANS, 2N3905 ,PNP HS SW
ACT	Q30005	-.--	4807-0000-001	TRANS, 2N3903 ,NPN HS SW
ACT	Q30006	-.--	4807-0000-002	TRANS, 2N3905 ,PNP HS SW
ACT	Q30007	-.--	4807-0000-001	TRANS, 2N3903 ,NPN HS SW
ACT	Q30008	-.--	4807-0000-001	TRANS, 2N3903 ,NPN HS SW
ACT	Q30009	-.--	4807-0000-001	TRANS, 2N3903 ,NPN HS SW
ACT	Q30010	-.--	4807-0000-001	TRANS, 2N3903 ,NPN HS SW
ACT	Q30011	-.--	4807-0000-002	TRANS, 2N3905 ,PNP HS SW
ACT	Q30012	-.--	4807-0000-001	TRANS, 2N3903 ,NPN HS SW
ACT	Q30013	-.--	4807-0000-002	TRANS, 2N3905 ,PNP HS SW
ACT	Q30014	-.--	4807-0000-001	TRANS, 2N3903 ,NPN HS SW
ACT	Q30015	-.--	4807-0000-001	TRANS, 2N3903 ,NPN HS SW
ACT	Q30016	-.--	4807-0000-001	TRANS, 2N3903 ,NPN HS SW
ACT	Q30017	-.--	4807-0000-001	TRANS, 2N3903 ,NPN HS SW

ASSY NO.	REVISION	DESCRIPTION	LAST ECN	DATE INC
7010-4931-000	C4	PCB ASSY,RANGE BOARD #2	10457	11/03/87

STAT	REF.DES.	QTY	COMP. PART NO.	DESCRIPTION
ACT	Q30018	-.--	4807-0000-001	TRANS, 2N3903 ,NPN HS SW
ACT	Q30019	-.--	4807-0000-002	TRANS, 2N3905 ,PNP HS SW
ACT	Q30020	-.--	4807-0000-001	TRANS, 2N3903 ,NPN HS SW
ACT	Q30021	2.00	4805-0000-003	TRANS, 2N3646 ,NPN HS SW
ACT	Q30022	-.--	4805-0000-003	TRANS, 2N3646 ,NPN HS SW
ACT	Q30023	-.--	4807-0000-001	TRANS, 2N3903 ,NPN HS SW
ACT	Q30024	-.--	4807-0000-002	TRANS, 2N3905 ,PNP HS SW
ACT	Q30025	-.--	4807-0000-002	TRANS, 2N3905 ,PNP HS SW
ACT	Q30026	-.--	4807-0000-002	TRANS, 2N3905 ,PNP HS SW
ACT	R30001	18.00	4702-0102-003	RES, 5, 1/4W, 1.0K OHM
ACT	R30002	9.00	4702-0221-003	RES, 5, 1/4W, 220 OHM
ACT	R30003	2.00	4702-0153-003	RES, 5, 1/4W, 15K OHM
ACT	R30004	3.00	4702-0561-003	RES, 5, 1/4W, 560 OHM
ACT	R30005	-.--	4702-0221-003	RES, 5, 1/4W, 220 OHM
ACT	R30006	-.--	4702-0102-003	RES, 5, 1/4W, 1.0K OHM
ACT	R30007	4.00	4702-0152-003	RES, 5, 1/4W, 1.5K OHM
ACT	R30008	9.00	4702-0331-003	RES, 5, 1/4W, 330 OHM
ACT	R30009	7.00	4702-0471-003	RES, 5, 1/4W, 470 OHM
ACT	R30010	2.00	4752-0502-002	POT, 5K OHM, 62-1-1-502
ACT	R30011	2.00	4702-0822-003	RES, 5, 1/4W, 8.2K OHM
ACT	R30012	6.00	4702-0103-003	RES, 5, 1/4W, 10K OHM
ACT	R30013	-.--	4702-0102-003	RES, 5, 1/4W, 1.0K OHM
ACT	R30014	-.--	4702-0331-003	RES, 5, 1/4W, 330 OHM
ACT	R30015	-.--	4702-0221-003	RES, 5, 1/4W, 220 OHM
ACT	R30016	-.--	4702-0102-003	RES, 5, 1/4W, 1.0K OHM
ACT	R30017	-.--	4702-0152-003	RES, 5, 1/4W, 1.5K OHM
ACT	R30018	-.--	4702-0471-003	RES, 5, 1/4W, 470 OHM
ACT	R30019	-.--	4702-0102-003	RES, 5, 1/4W, 1.0K OHM
ACT	R30020	2.00	4702-0181-003	RES, 5, 1/4W, 180 OHM
ACT	R30021	4.00	4752-0202-002	POT, 2K OHM, 62-1-1-202
ACT	R30022	-.--	4752-0202-002	POT, 2K OHM, 62-1-1-202
ACT	R30023	-.--	4702-0103-003	RES, 5, 1/4W, 10K OHM
ACT	R30024	4.00	4702-0223-003	RES, 5, 1/4W, 22K OHM
ACT	R30025	-.--	4702-0102-003	RES, 5, 1/4W, 1.0K OHM
ACT	R30026	-.--	4702-0221-003	RES, 5, 1/4W, 220 OHM
ACT	R30027	-.--	4702-0153-003	RES, 5, 1/4W, 15K OHM
ACT	R30028	-.--	4702-0561-003	RES, 5, 1/4W, 560 OHM
ACT	R30029	-.--	4702-0221-003	RES, 5, 1/4W, 220 OHM
ACT	R30030	-.--	4702-0471-003	RES, 5, 1/4W, 470 OHM
ACT	R30031	-.--	4752-0502-002	POT, 5K OHM, 62-1-1-502
ACT	R30032	-.--	4702-0822-003	RES, 5, 1/4W, 8.2K OHM
ACT	R30033	-.--	4702-0103-003	RES, 5, 1/4W, 10K OHM
ACT	R30034	-.--	4702-0102-003	RES, 5, 1/4W, 1.0K OHM
ACT	R30035	-.--	4702-0471-003	RES, 5, 1/4W, 470 OHM
ACT	R30036	-.--	4702-0331-003	RES, 5, 1/4W, 330 OHM
ACT	R30037	-.--	4702-0102-003	RES, 5, 1/4W, 1.0K OHM
ACT	R30038	-.--	4702-0152-003	RES, 5, 1/4W, 1.5K OHM
ACT	R30039	-.--	4702-0221-003	RES, 5, 1/4W, 220 OHM
ACT	R30040	-.--	4702-0181-003	RES, 5, 1/4W, 180 OHM
ACT	R30041	-.--	4752-0202-002	POT, 2K OHM, 62-1-1-202
ACT	R30042	-.--	4752-0202-002	POT, 2K OHM, 62-1-1-202
ACT	R30043	-.--	4702-0103-003	RES, 5, 1/4W, 10K OHM

ASSY NO.	REVISION	DESCRIPTION	LAST ECN	DATE INC
7010-4931-000	C4	PCB ASSY,RANGE BOARD #2	10457	11/03/87

STAT	REF DES.	QTY	COMP. PART NO.	DESCRIPTION
ACT	R30044	-.--	4702-0223-003	RES, 5, 1/4W, 22K OHM
ACT	R30045	-.--	4702-0102-003	RES, 5, 1/4W, 1.0K OHM
ACT	R30046	3.00	4702-0101-003	RES, 5, 1/4W, 100 OHM
ACT	R30047	1.00	4702-0680-003	RES, 5, 1/4W, 68 OHM
ACT	R30048	-.--	4702-0331-003	RES, 5, 1/4W, 330 OHM
ACT	R30049	-.--	4702-0331-003	RES, 5, 1/4W, 330 OHM
ACT	R30050	-.--	4702-0331-003	RES, 5, 1/4W, 330 OHM
ACT	R30051	-.--	4702-0331-003	RES, 5, 1/4W, 330 OHM
ACT	R30052	-.--	4702-0561-003	RES, 5, 1/4W, 560 OHM
ACT	R30053	-.--	4702-0102-003	RES, 5, 1/4W, 1.0K OHM
ACT	R30054	-.--	4702-0102-003	RES, 5, 1/4W, 1.0K OHM
ACT	R30055	3.00	4702-0332-003	RES, 5, 1/4W, 3.3K OHM
ACT	R30056	3.00	4702-0472-003	RES, 5, 1/4W, 4.7K OHM
ACT	R30057	2.00	4702-0473-003	RES, 5, 1/4W, 47K OHM
ACT	R30058	-.--	4702-0473-003	RES, 5, 1/4W, 47K OHM
ACT	R30059	2.00	4702-0222-003	RES, 5, 1/4W, 2.2K OHM
ACT	R30060	-.--	4702-0102-003	RES, 5, 1/4W, 1.0K OHM
ACT	R30061	-.--	4702-0102-003	RES, 5, 1/4W, 1.0K OHM
ACT	R30062	-.--	4702-0103-003	RES, 5, 1/4W, 10K OHM
ACT	R30063	-.--	4702-0102-003	RES, 5, 1/4W, 1.0K OHM
ACT	R30064	-.--	4702-0472-003	RES, 5, 1/4W, 4.7K OHM
ACT	R30065	-.--	4702-0223-003	RES, 5, 1/4W, 22K OHM
ACT	R30066	-.--	4702-0472-003	RES, 5, 1/4W, 4.7K OHM
ACT	R30067	-.--	4702-0223-003	RES, 5, 1/4W, 22K OHM
ACT	R30068	-.--	0002-0000-000	*** REF DESIG NOT USED ***
ACT	R30069	-.--	4702-0103-003	RES, 5, 1/4W, 10K OHM
ACT	R30070	-.--	4702-0102-003	RES, 5, 1/4W, 1.0K OHM
ACT	R30071	-.--	4702-0332-003	RES, 5, 1/4W, 3.3K OHM
ACT	R30072	-.--	4702-0102-003	RES, 5, 1/4W, 1.0K OHM
ACT	R30073	-.--	4702-0471-003	RES, 5, 1/4W, 470 OHM
ACT	R30074	1.00	4752-0503-002	POT, 50K OHM, 62-1-1-503
ACT	R30075	1.00	4706-4992-001	RES, 1, 1/4W, 49.9K OHM
ACT	R30076	1.00	4706-1131-001	RES, 1, 1/4W, 1.13K OHM
ACT	R30077	-.--	0002-0000-000	*** REF DESIG NOT USED ***
ACT	R30078	1.00	4702-0182-003	RES, 5, 1/4W, 1.8K OHM
ACT	R30079	1.00	4752-0102-002	POT, 1K OHM, 62-1-1-102
ACT	R30080	1.00	4706-4421-001	RES, 1, 1/4W, 4.42K OHM
ACT	R30081	-.--	4702-0222-003	RES, 5, 1/4W, 2.2K OHM
ACT	R30082	-.--	4702-0332-003	RES, 5, 1/4W, 3.3K OHM
ACT	R30083	-.--	4702-0221-003	RES, 5, 1/4W, 220 OHM
ACT	R30084	1.00	4702-0391-003	RES, 5, 1/4W, 390 OHM
ACT	R30085	1.00	4702-0479-003	RES, 5, 1/4W, 4.7 OHM
ACT	R30086	3.00	4702-0560-003	RES, 5, 1/4W, 56 OHM
ACT	R30087	-.--	4702-0102-003	RES, 5, 1/4W, 1.0K OHM
ACT	R30088	-.--	4702-0331-003	RES, 5, 1/4W, 330 OHM
ACT	R30089	-.--	4702-0101-003	RES, 5, 1/4W, 100 OHM
ACT	R30090	-.--	4702-0560-003	RES, 5, 1/4W, 56 OHM
ACT	R30091	-.--	4702-0101-003	RES, 5, 1/4W, 100 OHM
ACT	R30092	-.--	4702-0560-003	RES, 5, 1/4W, 56 OHM
ACT	R30093	-.--	4702-0102-003	RES, 5, 1/4W, 1.0K OHM
ACT	R30094	-.--	4702-0152-003	RES, 5, 1/4W, 1.5K OHM
ACT	R30095	-.--	4702-0331-003	RES, 5, 1/4W, 330 OHM

ASSY NO.	REVISION	DESCRIPTION	LAST ECN	DATE INC
7010-4931-000	C4	PCB ASSY,RANGE BOARD #2	10457	11/03/87

STAT	REF.DES.	QTY	COMP. PART NO.	DESCRIPTION
ACT	R30096	-.--	4702-0471-003	RES, 5, 1/4W, 470 OHM
ACT	R30097	-.--	4702-0221-003	RES, 5, 1/4W, 220 OHM
ACT	R30098	-.--	4702-0471-003	RES, 5, 1/4W, 470 OHM
ACT	R30099	-.--	4702-0221-003	RES, 5, 1/4W, 220 OHM
ACT	R30100	2.00	4702-0122-003	RES, 5, 1/4W, 1.2K OHM
ACT	R30101	-.--	4702-0122-003	RES, 5, 1/4W, 1.2K OHM
ACT	U30001	2.00	3133-0000-007	IC,4066B,QUAD BILATERAL SWITCH
ACT	U30002	2.00	3221-0001-000	IC,353,DUAL JFET OP AMP
ACT	U30003	-.--	3133-0000-007	IC,4066B,QUAD BILATERAL SWITCH
ACT	U30004	-.--	3221-0001-000	IC,353,DUAL JFET OP AMP
ACT	U30005	2.00	3131-0000-044	IC,74LS00,QUAD 2-INPUT NAND
ACT	U30006	-.--	3131-0000-044	IC,74LS00,QUAD 2-INPUT NAND
ACT	U30007	1.00	3131-0000-037	IC,74LS20,DUAL 4-INPUT NAND
ACT	U30008	2.00	3133-0000-024	IC,3130,BIMOS OP AMP,PLAST DIP
ACT	U30009	-.--	3133-0000-024	IC,3130,BIMOS OP AMP,PLAST DIP

ASSY NO	REVISION	DESCRIPTION	LAST ECN	DATE INC
7010-4931-100	B7	PCB ASSY,570-800 MZ FILTER	8681	06/06/86

STAT	REF DES	QTY	COMP. PART NO.	DESCRIPTION
ACT		.00	DWG-0000-4911-100	DWG SCHEM,570-800 MHZ FILTER
ACT	*01	1.00	1700-4921-100	PC BD,570-800 MZ FILTER
ACT	*02	1.00	1415-4952-500	ENCLOSURE,570-800 MHZ FILTER
ACT	*03	1 00	1414-4953-100	COVER,570-800 MHZ FILTER
ACT	*04	1.00	2508-4954-400	R F SHEILD
ACT	*05	.10	6011-0018-001	TUBING,TF,26 AWG,NATURAL,TW
ACT	*L38001	.00	1050-0000-071	WIRE,BUS,TINNED COPPER,18GA
ACT	*L38002	-.--	1050-0000-071	WIRE,BUS,TINNED COPPER,18GA
ACT	*L38003	-.--	1050-0000-071	WIRE,BUS,TINNED COPPER,18GA
ACT	*L38004	-.--	1050-0000-071	WIRE,BUS,TINNED COPPER,18GA
ACT	*L38005	.00	1050-0000-075	WIRE,BUS,TINNED COPPER,26GA
ACT	*L38006	-.--	1050-0000-075	WIRE,BUS,TINNED COPPER,26GA
ACT	C38001	5.00	1506-0030-017	CAP,PF 3.0, 100V,MICA, 17
ACT	C38002	4.00	1521-0000-004	CAP,VAR, 0.6- 4.5PF,500V,7273
ACT	C38003	-.--	1521-0000-004	CAP,VAR, 0.6- 4.5PF,500V,7273
ACT	C38004	-.--	1521-0000-004	CAP,VAR, 0.6- 4.5PF,500V,7273
ACT	C38005	-.--	1521-0000-004	CAP,VAR, 0.6- 4.5PF,500V,7273
ACT	C38006	-.--	1506-0030-017	CAP,PF 3.0, 100V,MICA, 17
ACT	C38007	2.00	1506-0010-017	CAP,PF 1.0, 100V,MICA, 50
ACT	C38008	-.--	1506-0030-017	CAP,PF 3.0, 100V,MICA, 17
ACT	C38009	-.--	1506-0030-017	CAP,PF 3.0, 100V,MICA, 17
ACT	C38010	- --	1506-0030-017	CAP,PF 3.0, 100V,MICA, 17
ACT	C38011	-.--	1506-0010-017	CAP,PF 1.0, 100V,MICA, 50
ACT	J38001	2 00	2200-2010-200	CONN,M SMB,PC MTG,STR,.656LG
ACT	J38002	- --	2200-2010-200	CONN,M SMB,PC MTG,STR, 656LG

ASSY NO	REVISION	DESCRIPTION	LAST ECN	DATE INC
7010-4931-200	B4	PCB ASSY,475 MHZ FILTER	7585	01/20/86

STAT	REF DES	QTY	COMP PART NO.	DESCRIPTION
ACT		.00	DWG-0000-4911-200	DWG SCHEM,475 MHZ FILTER
ACT	*01	1.00	1700-4921-200	PC BD,475 MHZ FILTER
ACT	*02	1.00	1415-4952-400	ENCLOSURE,475 MHZ FILTER
ACT	*03	1 00	1414-4953-000	COVER,475 MHZ FILTER
ACT	*L40001	.00	1050-0000-071	WIRE,BUS,TINNED COPPER,18GA
ACT	*L40002	- --	1050-0000-071	WIRE,BUS,TINNED COPPER,18GA
ACT	*L40003	-.--	1050-0000-071	WIRE,BUS,TINNED COPPER,18GA
ACT	*L40004	-.--	1050-0000-071	WIRE,BUS,TINNED COPPER,18GA
ACT	*L40005	-.--	1050-0000-071	WIRE,BUS,TINNED COPPER,18GA
ACT	C40001	5 00	1550-0300-500	CAP,VAR, 2.0- 8PF,350V,VPCM
ACT	C40002	-.--	1550-0300-500	CAP,VAR, 2.0- 8PF,350V,VPCM
ACT	C40003	-.--	1550-0300-500	CAP,VAR, 2.0- 8PF,350V,VPCM
ACT	C40004	-.--	1550-0300-500	CAP,VAR, 2.0- 8PF,350V,VPCM
ACT	C40005	- --	1550-0300-500	CAP,VAR, 2.0- 8PF,350V,VPCM
ACT	J40001	2 00	2200-2010-200	CONN,M SMB,PC MTG,STR, 656LG
ACT	J40002	- --	2200-2010-200	CONN,M SMB,PC MTG,STR, 656LG

ASSY NO	REVISION	DESCRIPTION	LAST ECN	DATE INC
7010-4931-300	B2	PCB ASSY,DISCRIMINATOR #2	8097	12/13/85

STAT	REF DES.	QTY	COMP. PART NO.	DESCRIPTION
ACT		1.00	1700-4921-300	PC BOARD,DISCRIMINATOR #2
ACT		.00	DWG-0000-4911-300	DWG SCHEM,DISCRIMINATOR BD #2
ACT	C35001	1.00	1506-0102-017	CAP,PF 1000, 100V,NPO, 5
ACT	C35002	1.00	1580-4702-105	CAP,UF 47, 10V,ELE,RDL
ACT	C35003	1.00	1506-0103-017	CAP,UF .010, 100V,CK05BX
ACT	C35004	2.00	1506-0470-017	CAP,PF 47, 100V,NPO 5
ACT	C35005	1.00	1506-0121-017	CAP,PF 120, 100V,NPO 5
ACT	C35006	-.--	1506-0470-017	CAP,PF 47, 100V,NPO 5
ACT	C35007	12.00	1521-0000-008	CAP,UF .10, 50V,DIP,Z5U
ACT	C35008	3.00	1506-0332-017	CAP,PF 3300, 100V,NPO, 5
ACT	C35009	-.--	1521-0000-008	CAP,UF .10, 50V,DIP,Z5U
ACT	C35010	-.--	1506-0332-017	CAP,PF 3300, 100V,NPO, 5
ACT	C35011	-.--	1506-0332-017	CAP,PF 3300, 100V,NPO, 5
ACT	C35012	-.--	1521-0000-008	CAP,UF .10, 50V,DIP,Z5U
ACT	C35013	-.--	1521-0000-008	CAP,UF .10, 50V,DIP,Z5U
ACT	C35014	-.--	1521-0000-008	CAP,UF .10, 50V,DIP,Z5U
ACT	C35015	-.--	1521-0000-008	CAP,UF .10, 50V,DIP,Z5U
ACT	C35016	-.--	1521-0000-008	CAP,UF .10, 50V,DIP,Z5U
ACT	C35017	-.--	1521-0000-008	CAP,UF .10, 50V,DIP,Z5U
ACT	C35018	-.--	1521-0000-008	CAP,UF .10, 50V,DIP,Z5U
ACT	C35019	-.--	1521-0000-008	CAP,UF .10, 50V,DIP,Z5U
ACT	C35020	-.--	1521-0000-008	CAP,UF .10, 50V,DIP,Z5U
ACT	C35021	-.--	1521-0000-008	CAP,UF .10, 50V,DIP,Z5U
ACT	J35001	1.00	2129-1001-010	CONN,HEADER,10-P STR 609-1027
ACT	L35001	1.00	1801-0128-003	IND, .12UH,.09OHM,1025-96
ACT	L35002	1.00	1801-0109-001	IND, 1.0 UH, 1 OHM,1025-20
ACT	Q35001	1.00	4807-0000-002	TRANS, 2N3905 ,PNP HS SW
ACT	R35001	1.00	4701-0102-003	RES, 5, 1/8W, 1.0K OHM
ACT	R35002	1.00	4701-0680-003	RES, 5, 1/8W, 68 OHM
ACT	R35003	1.00	4701-0332-003	RES, 5, 1/8W, 3.3K OHM
ACT	R35004	1.00	4701-0221-003	RES, 5, 1/8W, 220 OHM
ACT	R35005	3.00	4701-0331-003	RES, 5, 1/8W, 330 OHM
ACT	R35006	-.--	4701-0331-003	RES, 5, 1/8W, 330 OHM
ACT	R35007	-.--	4701-0331-003	RES, 5, 1/8W, 330 OHM
ACT	U35001	3.00	3132-0000-001	IC,74S00,QUAD 2-INPUT NAND
ACT	U35002	4.00	3132-0000-002	IC,74S112,DUAL JK FLIP-FLOP
ACT	U35003	8.00	3131-0000-030	IC,74LS191,BIN SYN U/D COUNTER
ACT	U35004	3.00	3131-0000-033	IC,74LS04,HEX INVERTER
ACT	U35005	-.--	3131-0000-030	IC,74LS191,BIN SYN U/D COUNTER
ACT	U35006	-.--	3131-0000-033	IC,74LS04,HEX INVERTER
ACT	U35007	-.--	3131-0000-030	IC,74LS191,BIN SYN U/D COUNTER
ACT	U35008	-.--	3132-0000-002	IC,74S112,DUAL JK FLIP-FLOP
ACT	U35009	1.00	3131-0000-038	IC,74LS74A,DUAL D FLIP-FLOP
ACT	U35010	2.00	3211-3374-000	IC,74LS374,OCTAL D FLIP-FLOP
ACT	U35011	-.--	3211-3374-000	IC,74LS374,OCTAL D FLIP-FLOP
ACT	U35012	2.00	3131-0000-044	IC,74LS00,QUAD 2-INPUT NAND
ACT	U35013	3.00	3131-0000-042	IC,74LS283,4-BIT BINARY ADDER
ACT	U35014	-.--	3131-0000-042	IC,74LS283,4-BIT BINARY ADDER
ACT	U35015	-.--	3131-0000-042	IC,74LS283,4-BIT BINARY ADDER
ACT	U35016	1.00	0002-0000-000	*** REF DESIG NOT USED ***
ACT	U35017	-.--	3132-0000-001	IC,74S00,QUAD 2-INPUT NAND
ACT	U35018	-.--	3131-0000-033	IC,74LS04,HEX INVERTER

ASSY NO.	REVISION	DESCRIPTION	LAST ECN	DATE INC
7010-4931-300	B2	PCB ASSY,DISCRIMINATOR #2	8097	12/13/85

STAT	REF DES	QTY	COMP. PART NO.	DESCRIPTION
ACT	U35019	-.--	3131-0000-044	IC,74LS00,QUAD 2-INPUT NAND
ACT	U35020	-.--	3132-0000-002	IC,74S112,DUAL JK FLIP-FLOP
ACT	U35021	-.--	3131-0000-030	IC,74LS191,BIN SYN U/D COUNTER
ACT	U35022	-.--	3131-0000-030	IC,74LS191,BIN SYN U/D COUNTER
ACT	U35023	1.00	3131-0000-037	IC,74LS20,DUAL 4-INPUT NAND
ACT	U35024	-.--	3132-0000-002	IC,74S112,DUAL JK FLIP-FLOP
ACT	U35025	-.--	3132-0000-001	IC,74S00,QUAD 2-INPUT NAND
ACT	U35026	-.--	3131-0000-030	IC,74LS191,BIN SYN U/D COUNTER
ACT	U35027	-.--	3131-0000-030	IC,74LS191,BIN SYN U/D COUNTER
ACT	U35028	-.--	3131-0000-030	IC,74LS191,BIN SYN U/D COUNTER

ASSY NO.	REVISION	DESCRIPTION	LAST ECN	DATE INC
7010-4931-400	B	PCB ASSY,IF MKR/OSC,RD-301	10890	03/02/88

STAT	REF.DES.	QTY	COMP. PART NO.	DESCRIPTION
ACT		.54	6003-0000-001	WIRE,HOOK,TFE,26GA, 7S,BLACK
ACT		.46	6003-0000-003	WIRE,HOOK,TFE,26GA, 7S,RED
ACT		.33	6003-0000-005	WIRE,HOOK,TFE,26GA, 7S,YELLOW
ACT		.38	6003-0000-007	WIRE,HOOK,TFE,26GA, 7S,BLUE
ACT		.50	6003-0000-009	WIRE,HOOK,TFE,26GA, 7S,GRAY
ACT		1.10	6003-0000-010	WIRE,HOOK,TFE,26GA, 7S,WHITE
ACT		.00	DWG-0000-4911-400	DWG SCHEM,IF MARKER/OSCILLATOR
ACT	*01	1.00	1400-2516-400	BRACKET MOUNTING 1
ACT	*02	1.00	1700-2507-100	BD PC 1
ACT	*03	1.00	2109-0000-007	CLAMP CABLE TYRAP TY34M.8
ACT	*04	6.00	2114-9001-001	CONTACT PIN,26-22GA,SYM001T0.6
ACT	*06	1.00	2506-2515-600	PLATE MOUNTING 2
ACT	*08	1.00	2850-0000-020	NUT,HEX,SMALL PAT,4-40
ACT	*09	2.00	2803-0313-006	SCREW,4-40 X 5/16 PPHM
ACT	*10	2.00	2803-0438-006	SCREW,4-40 X 7/16 PPHM
ACT	*11	2.00	2840-0000-003	WASHER,LOCK,INT TOOTH,4
ACT	*18	1.00	2840-0000-008	WASHER,FLAT,4,AN960-C4
ACT	*19	3.00	6004-6005-400	TY-RAP,4.0 LG
ACT	*20	1.00	2813-0000-005	TERM,INSUL,STANDOFF,.148DIA
ACT	C33001	2.00	1507-0156-021	CAP,UF 15, 20V,TANT, 20
ACT	C33002	-.--	1507-0156-021	CAP,UF 15, 20V,TANT, 20
ACT	C33003	2.00	1506-0330-017	CAP,PF 33, 100V,NPO 5
ACT	C33004	2.00	1506-0221-017	CAP,PF 220, 100V,NPO, 5
ACT	C33005	4.00	1506-0150-017	CAP,PF 15, 100V,NPO 5
ACT	C33006	-.--	1506-0150-017	CAP,PF 15, 100V,NPO 5
ACT	C33007	-.--	1506-0150-017	CAP,PF 15, 100V,NPO 5
ACT	C33008	8.00	1501-0103-005	CAP,UF .010, 50V,DISC, 10
ACT	C33009	11.00	1501-0102-001	CAP,PF 1000, 600V,DISC, 10
ACT	C33010	-.--	1501-0103-005	CAP,UF .010, 50V,DISC, 10
ACT	C33011	4.00	1506-0100-017	CAP,PF 10, 100V,NPO, 5
ACT	C33012	2.00	1506-0220-017	CAP,PF 22, 100V,NPO, 5
ACT	C33013	-.--	1506-0220-017	CAP,PF 22, 100V,NPO, 5
ACT	C33014	-.--	1506-0100-017	CAP,PF 10, 100V,NPO, 5
ACT	C33015	-.--	1501-0103-005	CAP,UF .010, 50V,DISC, 10
ACT	C33016	-.--	1501-0103-005	CAP,UF .010, 50V,DISC, 10
ACT	C33017	-.--	1501-0102-001	CAP,PF 1000, 600V,DISC, 10
ACT	C33018	-.--	1501-0102-001	CAP,PF 1000, 600V,DISC, 10
ACT	C33019	-.--	1501-0102-001	CAP,PF 1000, 600V,DISC, 10
ACT	C33020	-.--	1501-0103-005	CAP,UF .010, 50V,DISC, 10
ACT	C33021	-.--	1506-0221-017	CAP,PF 220, 100V,NPO, 5
ACT	C33022	-.--	1506-0330-017	CAP,PF 33, 100V,NPO 5
ACT	C33023	-.--	1506-0150-017	CAP,PF 15, 100V,NPO 5
ACT	C33024	-.--	1506-0100-017	CAP,PF 10, 100V,NPO, 5
ACT	C33025	-.--	1506-0100-017	CAP,PF 10, 100V,NPO, 5
ACT	C33026	-.--	1501-0102-001	CAP,PF 1000, 600V,DISC, 10
ACT	C33027	-.--	1501-0102-001	CAP,PF 1000, 600V,DISC, 10
ACT	C33028	-.--	1501-0103-005	CAP,UF .010, 50V,DISC, 10
ACT	C33029	1.00	1508-0476-018	CAP,UF 47, 35V,TANT,RDL
ACT	C33030	2.00	1507-0104-018	CAP,UF .10, 35V,TANT, 20
ACT	C33031	1.00	1508-0336-023	CAP,UF 33, 10V,TANT,RDL
ACT	C33032	-.--	1501-0102-001	CAP,PF 1000, 600V,DISC, 10
ACT	C33033	-.--	1507-0104-018	CAP,UF .10, 35V,TANT, 20

ASSY NO.	REVISION	DESCRIPTION	LAST ECN	DATE INC
7010-4931-400	B	PCB ASSY,IF MKR/OSC,RD-301	10890	03/02/88

STAT	REF.DES.	QTY	COMP. PART NO.	DESCRIPTION
ACT	C33034	1.00	1521-0000-002	CAP,VAR, 5.5-18PF,350V,VPCM
ACT	C33035	-.--	1501-0103-005	CAP,UF .010, 50V,DISC, 10
ACT	C33036	-.--	1501-0102-001	CAP,PF 1000, 600V,DISC, 10
ACT	C33037	-.--	1501-0102-001	CAP,PF 1000, 600V,DISC, 10
ACT	C33038	-.--	1501-0102-001	CAP,PF 1000, 600V,DISC, 10
ACT	C33039	-.--	1501-0102-001	CAP,PF 1000, 600V,DISC, 10
ACT	C33040	2.00	1507-0105-018	CAP,UF 1.0, 35V,TANT, 20
ACT	C33041	-.--	1507-0105-018	CAP,UF 1.0, 35V,TANT, 20
ACT	C33042	-.--	1501-0103-005	CAP,UF .010, 50V,DISC, 10
ACT	C33043	1.00	1523-0000-002	CAP,PF 1800, 50V,CHIP,X7R
ACT	C33044	1.00	1501-0339-001	CAP,PF 3.3, 600V,NPO,DISC
ACT	CR33001	1.00	4826-0000-002	DIODE,PC0605D ,VARC, 47PF/-4V
ACT	CR33002	1.00	4825-0000-003	DIODE,PC0600D ,VARC, 7PF/-4V
ACT	CR33003	1.00	4814-0000-001	DIODE, 1N823A ,REF,6.2V/7.5MA
ACT	CR33004	3.00	4828-0000-002	DIODE,PIN,.3 PF,100 NS
ACT	CR33005	-.--	4828-0000-002	DIODE,PIN,.3 PF,100 NS
ACT	CR33006	-.--	4828-0000-002	DIODE,PIN,.3 PF,100 NS
ACT	FL33001	5.00	5801-0000-006	FILTER,EMI/RFI,1500PF,8-32 DIA
ACT	FL33002	-.--	5801-0000-006	FILTER,EMI/RFI,1500PF,8-32 DIA
ACT	FL33003	-.--	5801-0000-006	FILTER,EMI/RFI,1500PF,8-32 DIA
ACT	FL33004	-.--	5801-0000-006	FILTER,EMI/RFI,1500PF,8-32 DIA
ACT	FL33005	-.--	5801-0000-006	FILTER,EMI/RFI,1500PF,8-32 DIA
ACT	G33001	1.00	2850-0000-031	LUG,GND,4
ACT	J33001	1.00	6042-0016-704	COAX ASSY,086,IF/MARKER OSC BD
ACT	J33002	1.00	6042-4983-500	COAX ASSY,SR.086,IF MRKER .10L
ACT	J33003	1.00	2115-9001-008	CONN,RECT.098 RCPT 8-P,SMR08VB
ACT	J33004	1.00	6042-0016-701	COAX ASSY,086,IF/MARKER OSC BD
ACT	J33005	1.00	6042-0016-709	COAX ASSY,086,IF/MARKER OSC BD
ACT	L33001	1.00	1804-0000-010	IND,VAR, .061-.101UH,YEL 618
ACT	L33002	3.00	1801-0022-001	IND, 22 UH,3.30HM,1025-52
ACT	L33003	3.00	1801-0108-001	IND, .10UH,.080HM,1025-94
ACT	L33004	-.--	1801-0022-001	IND, 22 UH,3.30HM,1025-52
ACT	L33005	3.00	1801-0478-001	IND, .47UH,.350HM,1025-12
ACT	L33006	-.--	1801-0478-001	IND, .47UH,.350HM,1025-12
ACT	L33007	-.--	1801-0478-001	IND, .47UH,.350HM,1025-12
ACT	L33008	1.00	1804-0000-013	IND,VAR, .125-.243UH,VIO 618
ACT	L33009	-.--	1801-0022-001	IND, 22 UH,3.30HM,1025-52
ACT	L33010	-.--	1801-0108-001	IND, .10UH,.080HM,1025-94
ACT	L33011	-.--	1801-0108-001	IND, .10UH,.080HM,1025-94
ACT	Q33001	7.00	4809-0000-005	TRANS,66382 ,NPN HF AMP
ACT	Q33002	1.00	4813-0000-001	TRANS, 3N201 ,N-CH MOSFET
ACT	Q33003	-.--	4809-0000-005	TRANS,66382 ,NPN HF AMP
ACT	Q33004	-.--	4809-0000-005	TRANS,66382 ,NPN HF AMP
ACT	Q33005	-.--	4809-0000-005	TRANS,66382 ,NPN HF AMP
ACT	Q33006	-.--	4809-0000-005	TRANS,66382 ,NPN HF AMP
ACT	Q33007	1.00	4801-0000-001	TRANS, 2N2222 ,NPN HS SW
ACT	Q33008	-.--	4809-0000-005	TRANS,66382 ,NPN HF AMP
ACT	Q33009	-.--	4809-0000-005	TRANS,66382 ,NPN HF AMP
ACT	R33001	6.00	4702-0223-003	RES, 5, 1/4W, 22K OHM
ACT	R33002	-.--	4702-0223-003	RES, 5, 1/4W, 22K OHM
ACT	R33003	-.--	4702-0223-003	RES, 5, 1/4W, 22K OHM
ACT	R33004	-.--	4702-0223-003	RES, 5, 1/4W, 22K OHM

ASSY NO.	REVISION	DESCRIPTION	LAST ECN	DATE INC
7010-4931-400	B	PCB ASSY,IF MKR/OSC,RD-301	10890	03/02/88

STAT	REF.DES.	QTY	COMP. PART NO.	DESCRIPTION
ACT	R33005	4.00	4702-0102-003	RES, 5, 1/4W, 1.0K OHM
ACT	R33006	2.00	4702-0680-003	RES, 5, 1/4W, 68 OHM
ACT	R33007	3.00	4702-0101-003	RES, 5, 1/4W, 100 OHM
ACT	R33008	1.00	4706-3161-001	RES, 1, 1/4W, 3.16K OHM
ACT	R33009	1.00	4702-0181-003	RES, 5, 1/4W, 180 OHM
ACT	R33010	1.00	4702-0471-003	RES, 5, 1/4W, 470 OHM
ACT	R33011	1.00	4702-0122-003	RES, 5, 1/4W, 1.2K OHM
ACT	R33012	1.00	4702-0182-003	RES, 5, 1/4W, 1.8K OHM
ACT	R33013	1.00	4702-0121-003	RES, 5, 1/4W, 120 OHM
ACT	R33014	-.--	4702-0101-003	RES, 5, 1/4W, 100 OHM
ACT	R33015	3.00	4702-0221-003	RES, 5, 1/4W, 220 OHM
ACT	R33016	-.--	4702-0101-003	RES, 5, 1/4W, 100 OHM
ACT	R33017	-.--	4702-0221-003	RES, 5, 1/4W, 220 OHM
ACT	R33018	-.--	4702-0223-003	RES, 5, 1/4W, 22K OHM
ACT	R33019	-.--	4702-0223-003	RES, 5, 1/4W, 22K OHM
ACT	R33020	-.--	4702-0102-003	RES, 5, 1/4W, 1.0K OHM
ACT	R33021	-.--	4702-0680-003	RES, 5, 1/4W, 68 OHM
ACT	R33022	1.00	4702-0474-003	RES, 5, 1/4W, 470K OHM
ACT	R33023	2.00	4702-0683-003	RES, 5, 1/4W, 68K OHM
ACT	R33024	1.00	4752-0103-002	POT, 10K OHM, 62-1-1-103
ACT	R33025	2.00	4702-0103-003	RES, 5, 1/4W, 10K OHM
ACT	R33026	-.--	4702-0102-003	RES, 5, 1/4W, 1.0K OHM
ACT	R33027	2.00	4702-0331-003	RES, 5, 1/4W, 330 OHM
ACT	R33028	1.00	4702-0472-003	RES, 5, 1/4W, 4.7K OHM
ACT	R33029	1.00	4702-0279-003	RES, 5, 1/4W, 2.7 OHM
ACT	R33030	-.--	4702-0103-003	RES, 5, 1/4W, 10K OHM
ACT	R33031	1.00	4702-0681-003	RES, 5, 1/4W, 680 OHM
ACT	R33032	2.00	4702-0222-003	RES, 5, 1/4W, 2.2K OHM
ACT	R33033	1.00	4702-0473-003	RES, 5, 1/4W, 47K OHM
ACT	R33034	-.--	4702-0102-003	RES, 5, 1/4W, 1.0K OHM
ACT	R33035	-.--	4702-0222-003	RES, 5, 1/4W, 2.2K OHM
ACT	R33036 SAT	1.00	4702-0822-003	RES, 5, 1/4W, 8.2K OHM
ACT	R33037	-.--	4702-0683-003	RES, 5, 1/4W, 68K OHM
ACT	R33038	-.--	4702-0331-003	RES, 5, 1/4W, 330 OHM
ACT	R33039	-.--	4702-0221-003	RES, 5, 1/4W, 220 OHM
ACT	R33040	1.00	4702-0333-003	RES, 5, 1/4W, 33K OHM
ACT	R33041	1.00	4702-0561-003	RES, 5, 1/4W, 560 OHM
ACT	U33001	1.00	3134-0000-011	IC,7908C,1.5A -8V REGULATOR
ACT	U33002	1.00	3134-0000-004	IC,1658,VC MULTIVIBRATOR

ASSY NO.	REVISION	DESCRIPTION	LAST ECN	DATE INC
7010-4931-500	A6	PCB ASSY,IF GEN PWR AMP,RD-301	9616	03/12/87

STAT	REF.DES.	QTY	COMP. PART NO.	DESCRIPTION
ACT		.42	6003-0000-001	WIRE,HOOK,TFE,26GA, 7S,BLACK
ACT		.33	6003-0000-003	WIRE,HOOK,TFE,26GA, 7S,RED
ACT		.29	6003-0000-005	WIRE,HOOK,TFE,26GA, 7S,YELLOW
ACT		.50	6003-0000-008	WIRE,HOOK,TFE,26GA, 7S,VIOLET
ACT		.42	6003-0000-010	WIRE,HOOK,TFE,26GA, 7S,WHITE
ACT		.50	6003-0000-018	WIRE,HOOK,TFE,26GA, 7S,WHT/VIO
ACT		.00	DWG-0000-4911-500	DWG SCHEM,IF GENERATOR
ACT	*01	1.00	2506-2515-400	PLATE MOUNTING 2
ACT	*02	1.00	1400-2516-400	BRACKET MOUNTING 1
ACT	*03	1.00	2109-0000-007	CLAMP CABLE TYRAP TY34M.8
ACT	*04	1.00	2850-0000-031	LUG,GND,4
ACT	*05	1.00	2801-0125-001	SCREW 2-56 X 1/8 SHSS
ACT	*06	1.00	2803-0250-006	SCREW,4-40 X 1/4 PPHM
ACT	*07	2.00	2803-0313-006	SCREW,4-40 X 5/16 PPHM
ACT	*09	6.00	2114-9001-001	CONTACT PIN,26-22GA,SYM001T0.6
ACT	*10	1.00	1700-2507-000	BD PC 1
ACT	*13	1.00	5400-0000-002	HEAT SINK,TO-5 TRANS
ACT	*14	1.00	2501-7600-118	SPACER,BR,.312OD,.203ID,.125LG
ACT	*15	1.00	2840-0000-008	WASHER,FLAT,4,AN960-C4
ACT	*16	4.00	6004-6005-400	TY-RAP,4.0 LG
ACT	C25	1.00	0002-0000-000	*** REF DESIG NOT USED ***
ACT	C36001	3.00	1501-0331-001	CAP,PF 330, 1000V,DISC, 10
ACT	C36002	-.--	1501-0331-001	CAP,PF 330, 1000V,DISC, 10
ACT	C36003	2.00	1501-0221-001	CAP,PF 220, 1000V,DISC, 10
ACT	C36004	7.00	1501-0103-005	CAP,UF .010, 50V,DISC, 10
ACT	C36005	-.--	1501-0103-005	CAP,UF .010, 50V,DISC, 10
ACT	C36006	-.--	1501-0331-001	CAP,PF 330, 1000V,DISC, 10
ACT	C36007	3.00	1501-0102-001	CAP,PF 1000, 600V,DISC, 10
ACT	C36008	-.--	1501-0103-005	CAP,UF .010, 50V,DISC, 10
ACT	C36009	-.--	1501-0103-005	CAP,UF .010, 50V,DISC, 10
ACT	C36010	2.00	1506-0271-017	CAP,PF 270, 100V,NPO, 5
ACT	C36011	-.--	1506-0271-017	CAP,PF 270, 100V,NPO, 5
ACT	C36012	-.--	1501-0102-001	CAP,PF 1000, 600V,DISC, 10
ACT	C36013	-.--	1501-0103-005	CAP,UF .010, 50V,DISC, 10
ACT	C36014	-.--	1501-0103-005	CAP,UF .010, 50V,DISC, 10
ACT	C36015	-.--	1501-0102-001	CAP,PF 1000, 600V,DISC, 10
ACT	C36016	1.00	1507-0105-018	CAP,UF 1.0, 35V,TANT, 20
ACT	C36017	1.00	1502-0334-012	CAP,UF .33, 50V,MPC, 5
ACT	C36018	1.00	1501-0680-001	CAP,PF 68, 1000V,DISC, 10
ACT	C36019	-.--	1501-0221-001	CAP,PF 220, 1000V,DISC, 10
ACT	C36020	3.00	1507-0475-018	CAP,UF 4.7, 35V,TANT, 20
ACT	C36021	-.--	1507-0475-018	CAP,UF 4.7, 35V,TANT, 20
ACT	C36022	-.--	1507-0475-018	CAP,UF 4.7, 35V,TANT, 20
ACT	C36023	-.--	1501-0103-005	CAP,UF .010, 50V,DISC, 10
ACT	C36024	1.00	1501-0560-001	CAP,PF 56, 1000V,DISC, 10
ACT	CR36001	5.00	4828-0000-002	DIODE,PIN,.3 PF,100 NS
ACT	CR36002	-.--	4828-0000-002	DIODE,PIN,.3 PF,100 NS
ACT	CR36003	-.--	4828-0000-002	DIODE,PIN,.3 PF,100 NS
ACT	CR36004	-.--	4828-0000-002	DIODE,PIN,.3 PF,100 NS
ACT	CR36005	-.--	4828-0000-002	DIODE,PIN,.3 PF,100 NS
ACT	CR36006	2.00	4815-0000-003	DIODE, 1N4148 ,SIGNAL, 75PRV
ACT	CR36007	2.00	4816-0000-001	DIODE,5082-2800,S BAR, 70VBR

ASSY NO.	REVISION	DESCRIPTION	LAST ECN	DATE INC
7010-4931-500	A6	PCB ASSY,IF GEN PWR AMP,RD-301	9616	03/12/87

STAT	REF.DES.	QTY	COMP. PART NO.	DESCRIPTION
ACT	CR36008	-.--	4816-0000-001	DIODE,5082-2800,S BAR, 70VBR
ACT	CR36009	-.--	4815-0000-003	DIODE, 1N4148 ,SIGNAL, 75PRV
ACT	FL36001	4.00	5801-0000-006	FILTER,EMI/RFI,1500PF,8-32 DIA
ACT	FL36002	-.--	5801-0000-006	FILTER,EMI/RFI,1500PF,8-32 DIA
ACT	FL36003	-.--	5801-0000-006	FILTER,EMI/RFI,1500PF,8-32 DIA
ACT	FL36004	-.--	5801-0000-006	FILTER,EMI/RFI,1500PF,8-32 DIA
ACT	FL36005	1.00	1526-0000-002	CAP,PF 47, 500V,FEEDTHRU
ACT	J36001	1.00	2115-9001-008	CONN,RECT.098 RCPT 8-P,SMR08VB
ACT	J36002	2.00	6042-0016-706	COAX ASSY,086,IF GEN/AMP BD
ACT	J36003	-.--	6042-0016-706	COAX ASSY,086,IF GEN/AMP BD
ACT	L36001	3.00	1801-0689-001	IND, 6.8 UH, 2 OHM,1025-40
ACT	L36002	1.00	1801-0022-001	IND, 22 UH,3.30HM,1025-52
ACT	L36003	-.--	1801-0689-001	IND, 6.8 UH, 2 OHM,1025-40
ACT	L36004	-.--	1801-0689-001	IND, 6.8 UH, 2 OHM,1025-40
ACT	L36005	1.00	1801-0338-001	IND, .33UH,.2 OHM,1025-08
ACT	L36006	4.00	1801-0015-001	IND, 15 UH,2.80HM,1025-48
ACT	L36007	-.--	1801-0015-001	IND, 15 UH,2.80HM,1025-48
ACT	L36008	-.--	1801-0015-001	IND, 15 UH,2.80HM,1025-48
ACT	L36009	-.--	1801-0015-001	IND, 15 UH,2.80HM,1025-48
ACT	Q36001	2.00	4809-0000-005	TRANS,66382 ,NPN HF AMP
ACT	Q36002	-.--	4809-0000-005	TRANS,66382 ,NPN HF AMP
ACT	Q36003	1.00	4803-0000-003	TRANS, 2N5109 ,NPN PWR HF AMP
ACT	Q36004	3.00	4805-0000-001	TRANS,2N2907A,PNP HS SW (3251)
ACT	Q36005	-.--	4805-0000-001	TRANS,2N2907A,PNP HS SW (3251)
ACT	Q36006	-.--	4805-0000-001	TRANS,2N2907A,PNP HS SW (3251)
ACT	Q36007	3.00	4805-0000-003	TRANS, 2N3646 ,NPN HS SW
ACT	Q36008	-.--	4805-0000-003	TRANS, 2N3646 ,NPN HS SW
ACT	Q36009	-.--	4805-0000-003	TRANS, 2N3646 ,NPN HS SW
ACT	R36001	3.00	4702-0101-003	RES, 5, 1/4W, 100 OHM
ACT	R36002	1.00	4702-0181-003	RES, 5, 1/4W, 180 OHM
ACT	R36003	1.00	4702-0151-003	RES, 5, 1/4W, 150 OHM
ACT	R36004	1.00	4702-0331-003	RES, 5, 1/4W, 330 OHM
ACT	R36005	1.00	4702-0473-003	RES, 5, 1/4W, 47K OHM
ACT	R36006	-.--	4702-0101-003	RES, 5, 1/4W, 100 OHM
ACT	R36007	1.00	4702-0270-003	RES, 5, 1/4W, 27 OHM
ACT	R36008	1.00	4702-0122-003	RES, 5, 1/4W, 1.2K OHM
ACT	R36009	3.00	4702-0681-003	RES, 5, 1/4W, 680 OHM
ACT	R36010	1.00	4709-0101-003	RES, 5, 5W, 100 OHM,WW
ACT	R36011	-.--	4702-0681-003	RES, 5, 1/4W, 680 OHM
ACT	R36012	-.--	4702-0681-003	RES, 5, 1/4W, 680 OHM
ACT	R36013	2.00	4706-4129-001	RES, 1, 1/4W, 41.2 OHM
ACT	R36014	2.00	4706-1009-001	RES, 1, 1/4W, 10.0 OHM
ACT	R36015	1.00	4706-8259-001	RES, 1, 1/4W, 82.5 OHM
ACT	R36016	-.--	4706-4129-001	RES, 1, 1/4W, 41.2 OHM
ACT	R36017	-.--	4706-1009-001	RES, 1, 1/4W, 10.0 OHM
ACT	R36018	2.00	4702-0102-003	RES, 5, 1/4W, 1.0K OHM
ACT	R36019	1.00	4702-0392-003	RES, 5, 1/4W, 3.9K OHM
ACT	R36020	3.00	4702-0222-003	RES, 5, 1/4W, 2.2K OHM
ACT	R36021	1.00	4702-0822-003	RES, 5, 1/4W, 8.2K OHM
ACT	R36022	1.00	4702-0182-003	RES, 5, 1/4W, 1.8K OHM
ACT	R36023	1.00	4753-0202-002	POT, 2K OHM, 62-2-1-202
ACT	R36024	1.00	4702-0103-003	RES, 5, 1/4W, 10K OHM

ASSY NO.	REVISION	DESCRIPTION	LAST ECN	DATE INC
7010-4931-500	A6	PCB ASSY,IF GEN PWR AMP,RD-301	9616	03/12/87

STAT	REF.DES.	QTY	COMP. PART NO.	DESCRIPTION
ACT	R36025	2.00	4702-0472-003	RES, 5, 1/4W, 4.7K OHM
ACT	R36026	-.--	4702-0222-003	RES, 5, 1/4W, 2.2K OHM
ACT	R36027	-.--	4702-0101-003	RES, 5, 1/4W, 100 OHM
ACT	R36028	1.00	4702-0272-003	RES, 5, 1/4W, 2.7K OHM
ACT	R36029	-.--	4702-0222-003	RES, 5, 1/4W, 2.2K OHM
ACT	R36030	-.--	4702-0102-003	RES, 5, 1/4W, 1.0K OHM
ACT	R36031	1.00	4702-0221-003	RES, 5, 1/4W, 220 OHM
ACT	R36032	1.00	4702-0152-003	RES, 5, 1/4W, 1.5K OHM
ACT	R36033	-.--	4702-0472-003	RES, 5, 1/4W, 4.7K OHM
ACT	R36034	1.00	4701-0103-003	RES, 5, 1/8W, 10K OHM
ACT	R36035	1.00	4702-0391-003	RES, 5, 1/4W, 390 OHM
ACT	U36001	1.00	3133-0000-014	IC,3130,BIMOS OP AMP,METAL CAN
ACT	U36002	1.00	3133-0000-007	IC,4066B,QUAD BILATERAL SWITCH

ASSY NO.	REVISION	DESCRIPTION	LAST ECN	DATE INC
7010-4931-600	A3	PCB ASSY,COUNTER LOGIC	RC0170	01/17/86

STAT	REF DES.	QTY	COMP PART NO.	DESCRIPTION
ACT		.00	DWG-0000-2510-200	SCHEM,COUNTER LOGIC/GATING/DIS
ACT	*01	1.00	1700-2505-000	BD PC 2
ACT	C21001	2.00	1506-0103-017	CAP,UF .010, 100V,CK05BX
ACT	C21002	-.--	1506-0103-017	CAP,UF .010, 100V,CK05BX
ACT	C21003	5.00	1507-0335-020	CAP,UF 3.3, 15V,TANT, 20
ACT	C21004	-.--	1507-0335-020	CAP,UF 3.3, 15V,TANT, 20
ACT	C21005	-.--	1507-0335-020	CAP,UF 3.3, 15V,TANT, 20
ACT	C21006	-.--	1507-0335-020	CAP,UF 3.3, 15V,TANT, 20
ACT	C21007	-.--	1507-0335-020	CAP,UF 3.3, 15V,TANT, 20
ACT	C21008	1.00	1501-0223-005	CAP,UF .022, 50V,DISC, 20
ACT	C21009	1.00	1506-0102-017	CAP,PF 1000, 100V,NPO, 5
ACT	CR21001	2.00	4814-0000-002	DIODE, 1N270 ,SIGNAL, 80PRV
ACT	CR21002	-.--	4814-0000-002	DIODE, 1N270 ,SIGNAL, 80PRV
ACT	Q21001	3.00	4801-0000-003	TRANS, 2N2896 ,NPN SW AMP
ACT	Q21002	2.00	4805-0000-003	TRANS, 2N3646 ,NPN HS SW
ACT	Q21003	-.--	4805-0000-003	TRANS, 2N3646 ,NPN HS SW
ACT	Q21004	-.--	4801-0000-003	TRANS, 2N2896 ,NPN SW AMP
ACT	Q21005	-.--	4801-0000-003	TRANS, 2N2896 ,NPN SW AMP
ACT	Q21006	1.00	4807-0000-002	TRANS, 2N3905 ,PNP HS SW
ACT	R21001	5.00	4702-0223-003	RES, 5, 1/4W, 22K OHM
ACT	R21002	-.--	4702-0223-003	RES, 5, 1/4W, 22K OHM
ACT	R21003	-.--	4702-0223-003	RES, 5, 1/4W, 22K OHM
ACT	R21004	-.--	4702-0223-003	RES, 5, 1/4W, 22K OHM
ACT	R21005	-.--	4702-0223-003	RES, 5, 1/4W, 22K OHM
ACT	R21006	8.00	4702-0224-003	RES, 5, 1/4W, 220K OHM
ACT	R21007	-.--	4702-0224-003	RES, 5, 1/4W, 220K OHM
ACT	R21008	-.--	4702-0224-003	RES, 5, 1/4W, 220K OHM
ACT	R21009	-.--	4702-0224-003	RES, 5, 1/4W, 220K OHM
ACT	R21010	-.--	4702-0224-003	RES, 5, 1/4W, 220K OHM
ACT	R21011	-.--	4702-0224-003	RES, 5, 1/4W, 220K OHM
ACT	R21012	4.00	4702-0103-003	RES, 5, 1/4W, 10K OHM
ACT	R21013	5.00	4702-0332-003	RES, 5, 1/4W, 3.3K OHM
ACT	R21014	2.00	4702-0102-003	RES, 5, 1/4W, 1.0K OHM
ACT	R21015	-.--	4702-0332-003	RES, 5, 1/4W, 3.3K OHM
ACT	R21016	-.--	4702-0102-003	RES, 5, 1/4W, 1.0K OHM
ACT	R21017	2.00	4702-0334-003	RES, 5, 1/4W, 330K OHM
ACT	R21018	-.--	4702-0334-003	RES, 5, 1/4W, 330K OHM
ACT	R21019	-.--	4702-0103-003	RES, 5, 1/4W, 10K OHM
ACT	R21020	-.--	4702-0103-003	RES, 5, 1/4W, 10K OHM
ACT	R21021	1.00	4702-0472-003	RES, 5, 1/4W, 4.7K OHM
ACT	R21022	-.--	4702-0332-003	RES, 5, 1/4W, 3.3K OHM
ACT	R21023	1.00	4702-0271-003	RES, 5, 1/4W, 270 OHM
ACT	R21024	1.00	4702-0152-003	RES, 5, 1/4W, 1.5K OHM
ACT	R21025	1.00	4702-0331-003	RES, 5, 1/4W, 330 OHM
ACT	R21026	-.--	4702-0332-003	RES, 5, 1/4W, 3.3K OHM
ACT	R21027	-.--	4702-0103-003	RES, 5, 1/4W, 10K OHM
ACT	R21028	-.--	4702-0332-003	RES, 5, 1/4W, 3.3K OHM
ACT	U21001	5.00	3135-0000-009	IC,700,DISPLAY DECODER/DRIVER
ACT	U21002	-.--	3135-0000-009	IC,700,DISPLAY DECODER/DRIVER
ACT	U21003	-.--	3135-0000-009	IC,700,DISPLAY DECODER/DRIVER
ACT	U21004	-.--	3135-0000-009	IC,700,DISPLAY DECODER/DRIVER
ACT	U21005	-.--	3135-0000-009	IC,700,DISPLAY DECODER/DRIVER

ASSY NO	REVISION	DESCRIPTION	LAST ECN	DATE INC
7010-4931-600	AJ	PCB ASSY,COUNTER LOGIC	RC0170	01/17/86

STAT	REF DES	QTY	COMP. PART NO.	DESCRIPTION
ACT	U21006	5.00	3130-0000-011	IC,7475,4-BIT BISTABLE LATCH
ACT	U21007	-.--	3130-0000-011	IC,7475,4-BIT BISTABLE LATCH
ACT	U21008	-.--	3130-0000-011	IC,7475,4-BIT BISTABLE LATCH
ACT	U21009	-.--	3130-0000-011	IC,7475,4-BIT BISTABLE LATCH
ACT	U21010	-.--	3130-0000-011	IC,7475,4-BIT BISTABLE LATCH
ACT	U21011	1.00	3130-0000-002	IC,7402,QUAD 2-INPUT NOR
ACT	U21012	3.00	3130-0000-013	IC,7490A,DECADE COUNTER
ACT	U21013	-.--	3130-0000-013	IC,7490A,DECADE COUNTER
ACT	U21014	-.--	3130-0000-013	IC,7490A,DECADE COUNTER
ACT	U21015	2.00	3130-0000-019	IC,74190,BCD SYN U/D COUNTER
ACT	U21016	-.--	3130-0000-019	IC,74190,BCD SYN U/D COUNTER
ACT	U21017	4.00	3130-0000-001	IC,7400,QUAD 2-INPUT NAND
ACT	U21018	1.00	3132-0000-002	IC,74S112,DUAL JK FLIP-FLOP
ACT	U21019	-.--	3130-0000-001	IC,7400,QUAD 2-INPUT NAND
ACT	U21020	-.--	3130-0000-001	IC,7400,QUAD 2-INPUT NAND
ACT	U21021	-.--	3130-0000-001	IC,7400,QUAD 2-INPUT NAND

PRINT DATE 87/02/03 BILL OF MATERIAL LISTED BY REF. DESIG PAGE 1

ASSY NO.	REVISION	DESCRIPTION	LAST ECN	DATE INC
7010-4931-700	A2	PCB ASSY,MOD MODE SWITCH	8696	06/12/86

STAT	REF.DES.	QTY	COMP. PART NO.	DESCRIPTION
ACT		.00	DWG-0000-4911-700	DWG SCHEM,MODULATION MODE SW
ACT	*01	4.00	0002-0000-000	*** REF DESIG NOT USED ***
ACT	*02	1.00	1700-2506-700	BD PC 1
ACT	*03	-.--	0002-0000-000	*** REF DESIG NOT USED ***
ACT	*04	1.00	1400-4951-600	BRKT,MODULATION MODE SWITCH
ACT	*05	-.--	0002-0000-000	*** REF DESIG NOT USED ***
ACT	*06	-.--	0002-0000-000	*** REF DESIG NOT USED ***
ACT	*07	2.00	2801-0188-006	SCREW 2-56 X 3/16 PBHMS
ACT	J32001	1.00	2115-0000-021	CONN MOLEX 22-05-2181
ACT	S32001	1.00	5115-0000-011	SWITCH PB1170 CENTRALAB

ASSY NO.	REVISION	DESCRIPTION	LAST ECN	DATE INC
7010-4932-700	E	PCB ASSY,AGC	10611	12/28/87

STAT	REF.DES.	QTY	COMP. PART NO.	DESCRIPTION
ACT	*01	1.00	1700-4922-700	PC BD,AGC
ACT	*02	2.00	2803-0313-006	SCREW,4-40 X 5/16 PPHM
ACT	*03	4.00	2840-0000-009	WASHER,FLAT,4,MS15795-803
ACT	*04	2.00	2850-0000-008	NUT,HEX,REG PAT,4-40
ACT	C47001	1.00	1501-0103-005	CAP,UF .010, 50V,DISC, 10
ACT	C47002	9.00	1521-0000-008	CAP,UF .10, 50V,DIP,Z5U
ACT	C47003	3.00	1502-0104-010	CAP,UF .10, 50V,PC, 5
ACT	C47004	-.--	1521-0000-008	CAP,UF .10, 50V,DIP,Z5U
ACT	C47005	-.--	1521-0000-008	CAP,UF .10, 50V,DIP,Z5U
ACT	C47006	3.00	1502-0103-010	CAP,UF .010, 50V,PC, 2
ACT	C47007	-.--	1502-0103-010	CAP,UF .010, 50V,PC, 2
ACT	C47008	-.--	1502-0103-010	CAP,UF .010, 50V,PC, 2
ACT	C47009	-.--	1521-0000-008	CAP,UF .10, 50V,DIP,Z5U
ACT	C47010	-.--	1521-0000-008	CAP,UF .10, 50V,DIP,Z5U
ACT	C47011	1.00	1508-0157-020	CAP,UF 150, 15V,TANT,RDL
ACT	C47012	3.00	1507-0105-018	CAP,UF 1.0, 35V,TANT, 20
ACT	C47013	1.00	1506-0151-017	CAP,PF 150, 100V,NPO, 5
ACT	C47014	4.00	1605-3360-475	CAP,UF 33, 16V,TANT,RDL
ACT	C47015	-.--	1605-3360-475	CAP,UF 33, 16V,TANT,RDL
ACT	C47016	-.--	1521-0000-008	CAP,UF .10, 50V,DIP,Z5U
ACT	C47017	2.00	1508-0476-018	CAP,UF 47, 35V,TANT,RDL
ACT	C47018	-.--	1502-0104-010	CAP,UF .10, 50V,PC, 5
ACT	C47019	-.--	1605-3360-475	CAP,UF 33, 16V,TANT,RDL
ACT	C47020	-.--	1605-3360-475	CAP,UF 33, 16V,TANT,RDL
ACT	C47021	-.--	1502-0104-010	CAP,UF .10, 50V,PC, 5
ACT	C47022	-.--	1508-0476-018	CAP,UF 47, 35V,TANT,RDL
ACT	C47023	-.--	1507-0105-018	CAP,UF 1.0, 35V,TANT, 20
ACT	C47024	-.--	1507-0105-018	CAP,UF 1.0, 35V,TANT, 20
ACT	C47025	4.00	1580-4792-305	CAP,UF 4.7, 25V,ELE,RDL
ACT	C47026	-.--	1580-4792-305	CAP,UF 4.7, 25V,ELE,RDL
ACT	C47027	-.--	1580-4792-305	CAP,UF 4.7, 25V,ELE,RDL
ACT	C47028	-.--	1580-4792-305	CAP,UF 4.7, 25V,ELE,RDL
ACT	C47029	3.00	1506-0102-017	CAP,PF 1000, 100V,NPO, 5
ACT	C47032	-.--	1521-0000-008	CAP,UF .10, 50V,DIP,Z5U
ACT	C47033	1.00	1506-0272-017	CAP,PF 2700, 100V,NPO, 5
ACT	C47034	-.--	1521-0000-008	CAP,UF .10, 50V,DIP,Z5U
ACT	C47035	-.--	1521-0000-008	CAP,UF .10, 50V,DIP,Z5U
ACT	C49030	-.--	1506-0102-017	CAP,PF 1000, 100V,NPO, 5
ACT	C49031	-.--	1506-0102-017	CAP,PF 1000, 100V,NPO, 5
ACT	CR47001	7.00	4815-0000-003	DIODE, 1N4148 ,SIGNAL, 75PRV
ACT	CR47002	-.--	4815-0000-003	DIODE, 1N4148 ,SIGNAL, 75PRV
ACT	CR47003	-.--	4815-0000-003	DIODE, 1N4148 ,SIGNAL, 75PRV
ACT	CR47004	-.--	4815-0000-003	DIODE, 1N4148 ,SIGNAL, 75PRV
ACT	CR47005	-.--	4815-0000-003	DIODE, 1N4148 ,SIGNAL, 75PRV
ACT	CR47006	-.--	4815-0000-003	DIODE, 1N4148 ,SIGNAL, 75PRV
ACT	CR47007	-.--	4815-0000-003	DIODE, 1N4148 ,SIGNAL, 75PRV
ACT	J47001	2.00	2115-0000-050	WAFER,PCB,.100C,STR,15-P
ACT	J47002	-.--	2115-0000-050	WAFER,PCB,.100C,STR,15-P
ACT	J47003	2.00	2200-2010-400	CONN,M SMB,PC MTG,STR,.453LG
ACT	J47004	-.--	2200-2010-400	CONN,M SMB,PC MTG,STR,.453LG
ACT	Q47001	4.00	4807-0000-002	TRANS, 2N3905 ,PNP HS SW
ACT	Q47002	-.--	4807-0000-002	TRANS, 2N3905 ,PNP HS SW

ASSY NO.	REVISION	DESCRIPTION	LAST ECN	DATE INC
7010-4932-700	E	PCB ASSY,AGC	10611	12/28/87

STAT	REF.DES.	QTY	COMP. PART NO.	DESCRIPTION
ACT	Q47003	1.00	4801-0000-001	TRANS, 2N2222 ,NPN HS SW
ACT	Q47004	1.00	4805-0000-001	TRANS,2N2907A,PNP HS SW (3251)
ACT	Q47005	5.00	4807-0000-001	TRANS, 2N3903 ,NPN HS SW
ACT	Q47006	2.00	4811-0000-001	TRANS,SJE1461 ,NPN PWR AMP
ACT	Q47007	-.--	4807-0000-002	TRANS, 2N3905 ,PNP HS SW
ACT	Q47008	-.--	4811-0000-001	TRANS,SJE1461 ,NPN PWR AMP
ACT	Q47009	-.--	4807-0000-001	TRANS, 2N3903 ,NPN HS SW
ACT	Q47010	-.--	4807-0000-001	TRANS, 2N3903 ,NPN HS SW
ACT	Q47011	-.--	4807-0000-001	TRANS, 2N3903 ,NPN HS SW
ACT	Q47012	-.--	4807-0000-001	TRANS, 2N3903 ,NPN HS SW
ACT	Q47013	-.--	4807-0000-002	TRANS, 2N3905 ,PNP HS SW
ACT	Q47014	1.00	5050-2601-000	TRANS,SF-90038,FET *SELECTED
ACT	R47001	2.00	4752-0502-002	POT, 5K OHM, 62-1-1-502
ACT	R47002	-.--	4752-0502-002	POT, 5K OHM, 62-1-1-502
ACT	R47003	1.00	4752-0104-002	POT,100K OHM, 62-1-1-104
ACT	R47004	1.00	4701-0224-003	RES, 5, 1/8W, 220K OHM
ACT	R47005	1.00	4701-0821-003	RES, 5, 1/8W, 820 OHM
ACT	R47006	3.00	4701-0153-003	RES, 5, 1/8W, 15K OHM
ACT	R47007	7.00	4701-0104-003	RES, 5, 1/8W, 100K OHM
ACT	R47008	1.00	4701-0394-003	RES, 5, 1/8W, 390K OHM
ACT	R47009	1.00	4701-0183-003	RES, 5, 1/8W, 18K OHM
ACT	R47010	1.00	4701-0564-003	RES, 5, 1/8W, 560K OHM
ACT	R47011	3.00	4701-0103-003	RES, 5, 1/8W, 10K OHM
ACT	R47012	-.--	4701-0104-003	RES, 5, 1/8W, 100K OHM
ACT	R47013	3.00	4701-0102-003	RES, 5, 1/8W, 1.0K OHM
ACT	R47014	-.--	4701-0104-003	RES, 5, 1/8W, 100K OHM
ACT	R47015	1.00	4706-1001-001	RES, 1, 1/4W, 1.00K OHM
ACT	R47016	1.00	4706-4322-001	RES, 1, 1/4W, 43.2K OHM
ACT	R47017	2.00	4701-0273-003	RES, 5, 1/8W, 27K OHM
ACT	R47018	-.--	4701-0273-003	RES, 5, 1/8W, 27K OHM
ACT	R47019	2.00	4706-1332-001	RES, 1, 1/4W, 13.3K OHM
ACT	R47020	-.--	4706-1332-001	RES, 1, 1/4W, 13.3K OHM
ACT	R47021	4.00	4706-1002-001	RES, 1, 1/4W, 10.0K OHM
ACT	R47022	1.00	4706-1152-001	RES, 1, 1/4W, 11.5K OHM
ACT	R47023	-.--	4701-0104-003	RES, 5, 1/8W, 100K OHM
ACT	R47024	-.--	4701-0103-003	RES, 5, 1/8W, 10K OHM
ACT	R47025	-.--	4701-0102-003	RES, 5, 1/8W, 1.0K OHM
ACT	R47026	3.00	4701-0222-003	RES, 5, 1/8W, 2.2K OHM
ACT	R47027	-.--	4701-0222-003	RES, 5, 1/8W, 2.2K OHM
ACT	R47028	-.--	4701-0153-003	RES, 5, 1/8W, 15K OHM
ACT	R47029	-.--	4701-0153-003	RES, 5, 1/8W, 15K OHM
ACT	R47031	-.--	4706-1002-001	RES, 1, 1/4W, 10.0K OHM
ACT	R47032	-.--	4706-1002-001	RES, 1, 1/4W, 10.0K OHM
ACT	R47033	-.--	4706-1002-001	RES, 1, 1/4W, 10.0K OHM
ACT	R47034	2.00	4702-0153-003	RES, 5, 1/4W, 15K OHM
ACT	R47035	1.00	4752-0203-002	POT, 20K OHM, 62-1-1-203
ACT	R47036	1.00	4706-8251-001	RES, 1, 1/4W, 8.25K OHM
ACT	R47037	1.00	4752-0503-002	POT, 50K OHM, 62-1-1-503
ACT	R47038	3.00	4702-0103-003	RES, 5, 1/4W, 10K OHM
ACT	R47039	2.00	4752-0103-002	POT, 10K OHM, 62-1-1-103
ACT	R47040	1.00	4702-0273-003	RES, 5, 1/4W, 27K OHM
ACT	R47041	1.00	4701-0471-003	RES, 5, 1/8W, 470 OHM

ASSY NO.	REVISION	DESCRIPTION	LAST ECN	DATE INC
7010-4932-700	E	PCB ASSY,AGC	10611	12/28/87

STAT	REF.DES.	QTY	COMP. PART NO.	DESCRIPTION
ACT	R47042	-.--	4702-0153-003	RES, 5, 1/4W, 15K OHM
ACT	R47043	1.00	4702-0332-003	RES, 5, 1/4W, 3.3K OHM
ACT	R47044	-.--	4752-0103-002	POT, 10K OHM, 62-1-1-103
ACT	R47045	-.--	4702-0103-003	RES, 5, 1/4W, 10K OHM
ACT	R47046	2.00	4702-0472-003	RES, 5, 1/4W, 4.7K OHM
ACT	R47047	-.--	4702-0103-003	RES, 5, 1/4W, 10K OHM
ACT	R47048	-.--	4702-0472-003	RES, 5, 1/4W, 4.7K OHM
ACT	R47049	2.00	4702-0563-003	RES, 5, 1/4W, 56K OHM
ACT	R47050	1.00	4702-0223-003	RES, 5, 1/4W, 22K OHM
ACT	R47051	-.--	4702-0563-003	RES, 5, 1/4W, 56K OHM
ACT	R47052	1.00	4701-0682-003	RES, 5, 1/8W, 6.8K OHM
ACT	R47053	1.00	4701-0392-003	RES, 5, 1/8W, 3.9K OHM
ACT	R47054	-.--	4701-0222-003	RES, 5, 1/8W, 2.2K OHM
ACT	R47055	1.00	4701-0822-003	RES, 5, 1/8W, 8.2K OHM
ACT	R47056	2.00	4702-0470-003	RES, 5, 1/4W, 47 OHM
ACT	R47057	-.--	4702-0470-003	RES, 5, 1/4W, 47 OHM
ACT	R47058	2.00	4702-0100-003	RES, 5, 1/4W, 10 OHM
ACT	R47059	-.--	4702-0100-003	RES, 5, 1/4W, 10 OHM
ACT	R47060	-.--	4701-0102-003	RES, 5, 1/8W, 1.0K OHM
ACT	R47061	1.00	4701-0561-003	RES, 5, 1/8W, 560 OHM
ACT	R47062	-.--	4701-0104-003	RES, 5, 1/8W, 100K OHM
ACT	R47063	-.--	4701-0104-003	RES, 5, 1/8W, 100K OHM
ACT	R47064	-.--	4701-0104-003	RES, 5, 1/8W, 100K OHM
ACT	R47065	1.00	4752-0501-002	POT, 500 OHM, 62-1-1-501
ACT	R47066	2.00	4701-0472-003	RES, 5, 1/8W, 4.7K OHM
ACT	R47067	-.--	4701-0472-003	RES, 5, 1/8W, 4.7K OHM
ACT	R47068	-.--	4701-0103-003	RES, 5, 1/8W, 10K OHM
ACT	U47001	2.00	3135-0000-054	IC,412,DUAL J-FET OP AMP
ACT	U47002	-.--	3135-0000-054	IC,412,DUAL J-FET OP AMP
ACT	U47003	1.00	3133-0000-006	IC,4049UB,HEX BUFFER/CONVERTER
ACT	U47004	1.00	3214-9000-000	IC,74HC00,HS CMOS,4*2-INP NAND
ACT	U47005	1.00	3214-9244-000	IC,74HC244,OCTAL BUF/DRVR/RCVR
ACT	U47006	2.00	3130-0000-025	IC,741C,GENERAL PURPOSE OP AMP
ACT	U47007	-.--	3130-0000-025	IC,741C,GENERAL PURPOSE OP AMP

ASSY NO.	REVISION	DESCRIPTION	LAST ECN	DATE INC
7010-4932-800	A1	PC BD ASSY-DISCR BD NO.1	8521	05/01/86

STAT	REF DES.	QTY	COMP. PART NO.	DESCRIPTION
ACT	*01	1.00	1700-4922-800	PC BD,DISCR BD NO.1
ACT	*02	1.00	1415-4952-600	ENCL,DISC,BOTTOM,8.15LG
ACT	*03	1.00	1415-4952-700	ENCL,DISC TOP,8.05 LG
ACT	*04	1.00	1415-4952-800	ENCL,DISCRIMINATOR BOT,3.72 LG
ACT	*05	1.00	1415-4952-900	ENCL,DISCRIMINATOR TOP,3.72 LG
ACT	*06	1.00	2801-0250-006	SCREW,2-56 X 1/4 PPHM
ACT	*07	13.00	2803-1000-003	SCREW,4-40 X 1 PFHM
ACT	*08	4.00	2803-0750-006	SCREW,4-40 X 3/4 PPHM
ACT	*10	2.00	2750-0150-500	CORE,BEAD,STACKPOLE 57-0180
ACT	*11	4.00	2803-0250-006	SCREW,4-40 X 1/4 PPHM
ACT	*TB50001	1.00	2155-1010-020	TERM STRIP,.100C,STR,20-P
ACT	*TB50002	-.--	2155-1010-020	TERM STRIP,.100C,STR,20-P
ACT	*TB50003	-.--	2155-1010-020	TERM STRIP,.100C,STR,20-P
ACT	C50001	3.00	1517-3295-303	CAP,VAR,6 - 20 PF
ACT	C50002 SAT	11.00	1506-0270-017	CAP,PF 27, 100V,NPO, 5
ACT	C50003 SAT	-.--	1506-0270-017	CAP,PF 27, 100V,NPO, 5
ACT	C50004	-.--	1517-3295-303	CAP,VAR,6 - 20 PF
ACT	C50005	2.00	1506-0182-017	CAP,PF 1800, 100V,NPO, 5
ACT	C50006	-.--	1517-3295-303	CAP,VAR,6 - 20 PF
ACT	C50007 SAT	-.--	1506-0270-017	CAP,PF 27, 100V,NPO, 5
ACT	C50008	5.00	1506-0680-017	CAP,PF 68, 100V,NPO, 5
ACT	C50009	9.00	1507-0685-018	CAP,UF 6.8, 35V,TANT, 20
ACT	C50010	5.00	1506-0103-016	CAP,UF, .010 50V,NPO 5%
ACT	C50011	16.00	1521-0000-008	CAP,UF .10, 50V,DIP,Z5U
ACT	C50012	3.00	1506-0471-017	CAP,PF 470, 100V,NPO, 5
ACT	C50013	-.--	1521-0000-008	CAP,UF .10, 50V,DIP,Z5U
ACT	C50014	2.00	1506-0681-017	CAP,PF 680, 100V,NPO, 5
ACT	C50015	-.--	1506-0182-017	CAP,PF 1800, 100V,NPO, 5
ACT	C50016	-.--	1506-0680-017	CAP,PF 68, 100V,NPO, 5
ACT	C50017	-.--	1507-0685-018	CAP,UF 6.8, 35V,TANT, 20
ACT	C50018	-.--	1521-0000-008	CAP,UF .10, 50V,DIP,Z5U
ACT	C50019	-.--	1506-0471-017	CAP,PF 470, 100V,NPO, 5
ACT	C50020	1.00	1507-0566-024	CAP,UF 56, 6V,TANT, 20
ACT	C50021	-.--	1521-0000-008	CAP,UF .10, 50V,DIP,Z5U
ACT	C50022	-.--	1521-0000-008	CAP,UF .10, 50V,DIP,Z5U
ACT	C50023	4.00	1506-0103-017	CAP,UF .010, 100V,CK05BX
ACT	C50024	2.00	1506-0220-017	CAP,PF 22, 100V,NPO, 5
ACT	C50025	1.00	1502-0104-002	CAP,UF .10, 50V,PCARB, 2
ACT	C50026	-.--	1506-0680-017	CAP,PF 68, 100V,NPO, 5
ACT	C50027	-.--	1506-0471-017	CAP,PF 470, 100V,NPO, 5
ACT	C50028	-.--	1521-0000-008	CAP,UF .10, 50V,DIP,Z5U
ACT	C50029	-.--	1507-0685-018	CAP,UF 6.8, 35V,TANT, 20
ACT	C50030	3.00	1502-0105-007	CAP,UF 1.0, 50V,MPC, 5
ACT	C50031	-.--	1502-0105-007	CAP,UF 1.0, 50V,MPC, 5
ACT	C50032	-.--	1502-0105-007	CAP,UF 1.0, 50V,MPC, 5
ACT	C50033	-.--	1506-0680-017	CAP,PF 68, 100V,NPO, 5
ACT	C50034	-.--	1506-0103-016	CAP,UF, .010 50V,NPO 5%
ACT	C50035	-.--	1521-0000-008	CAP,UF .10, 50V,DIP,Z5U
ACT	C50036	-.--	1506-0680-017	CAP,PF 68, 100V,NPO, 5
ACT	C50037	12.00	1506-0102-017	CAP,PF 1000, 100V,NPO, 5
ACT	C50038	1.00	1507-0476-018	CAP,UF 47, 35V,TANT, 20
ACT	C50039	-.--	1506-0681-017	CAP,PF 680, 100V,NPO, 5

ASSY NO	REVISION	DESCRIPTION	LAST ECN	DATE INC
7010-4932-800	A1	PC BD ASSY-DISCR BD NO.1	8521	05/01/86

STAT	REF.DES.	QTY	COMP. PART NO.	DESCRIPTION
ACT	C50040	-.--	1521-0000-008	CAP,UF .10, 50V,DIP,Z5U
ACT	C50041	-.--	1506-0103-016	CAP,UF, .010 50V,NPO 5%
ACT	C50042	1.00	1507-0105-018	CAP,UF 1.0, 35V,TANT, 20
ACT	C50043	-.--	1521-0000-008	CAP,UF .10, 50V,DIP,Z5U
ACT	C50044	2.00	1508-0157-020	CAP,UF 150, 15V,TANT,RDL
ACT	C50045	-.--	1508-0157-020	CAP,UF 150, 15V,TANT,RDL
ACT	C50046	1.00	1580-4702-105	CAP,UF 47, 10V,ELE,RDL
ACT	C50047	4.00	1523-0000-002	CAP,PF 1800, 50V,CHIP,X7R
ACT	C50048	5.00	1506-0020-017	CAP,PF 2.2,100V,NPO,25
ACT	C50049	-.--	1506-0103-016	CAP,UF, .010 50V,NPO 5%
ACT	C50050	5.00	1506-0101-017	CAP,PF, 100, 100V,NPO, 5
ACT	C50051	1.00	1620-5090-511	CAP,PF 5.0 50V,CHIP
ACT	C50052	-.--	1506-0020-017	CAP,PF 2.2,100V,NPO,25
ACT	C50053	6.00	1506-0030-017	CAP,PF 3.0, 100V,MICA, 17
ACT	C50054	2.00	1521-0000-004	CAP,VAR, 0.6- 4 5PF,500V,7273
ACT	C50055	-.--	1506-0030-017	CAP,PF 3.0, 100V,MICA, 17
ACT	C50056	21.00	1506-0050-017	CAP,PF 5.5 100V,NPO 5
ACT	C50057	-.--	1506-0050-017	CAP,PF 5.5 100V,NPO 5
ACT	C50058	-.--	1506-0050-017	CAP,PF 5.5 100V,NPO 5
ACT	C50059	1.00	1620-2210-600	CAP,PF 220, 100V,CHIP,NPO
ACT	C50060	-.--	1506-0030-017	CAP,PF 3.0, 100V,MICA, 17
ACT	C50061	-.--	1506-0020-017	CAP,PF 2.2,100V,NPO,25
ACT	C50062	-.--	1506-0030-017	CAP,PF 3.0, 100V,MICA, 17
ACT	C50063	-.--	1506-0030-017	CAP,PF 3.0, 100V,MICA, 17
ACT	C50064	-.--	1506-0101-017	CAP,PF, 100, 100V,NPO, 5
ACT	C50065	-.--	1506-0270-017	CAP,PF 27, 100V,NPO, 5
ACT	C50066	-.--	1506-0050-017	CAP,PF 5.5 100V,NPO 5
ACT	C50067	-.--	1506-0270-017	CAP,PF 27, 100V,NPO, 5
ACT	C50068	-.--	1506-0270-017	CAP,PF 27, 100V,NPO, 5
ACT	C50069	-.--	1506-0102-017	CAP,PF 1000, 100V,NPO, 5
ACT	C50070	-.--	1506-0101-017	CAP,PF, 100, 100V,NPO, 5
ACT	C50071	-.--	1523-0000-002	CAP,PF 1800, 50V,CHIP,X7R
ACT	C50072	-.--	1506-0101-017	CAP,PF, 100, 100V,NPO, 5
ACT	C50073	-.--	1506-0030-017	CAP,PF 3.0, 100V,MICA, 17
ACT	C50074	-.--	1506-0103-017	CAP,UF .010, 100V,CK05BX
ACT	C50075	-.--	1506-0270-017	CAP,PF 27, 100V,NPO, 5
ACT	C50076	-.--	1506-0103-016	CAP,UF, .010 50V,NPO 5%
ACT	C50077	-.--	1506-0050-017	CAP,PF 5.5 100V,NPO 5
ACT	C50078	2.00	1620-2200-500	CAP,PF 22, 100V,CHIP,NPO
ACT	C50079	28.00	0002-0000-000	*** REF DESIG NOT USED ***
ACT	C50080	-.--	1506-0050-017	CAP,PF 5.5 100V,NPO 5
ACT	C50081	-.--	0002-0000-000	*** REF DESIG NOT USED ***
ACT	C50082	-.--	1506-0270-017	CAP,PF 27, 100V,NPO, 5
ACT	C50083	-.--	1506-0270-017	CAP,PF 27, 100V,NPO, 5
ACT	C50084	-.--	1506-0270-017	CAP,PF 27, 100V,NPO, 5
ACT	C50085	-.--	0002-0000-000	*** REF DESIG NOT USED ***
ACT	C50086	-.--	1506-0270-017	CAP,PF 27, 100V,NPO, 5
ACT	C50087	-.--	1523-0000-002	CAP,PF 1800, 50V,CHIP,X7R
ACT	C50088	-.--	1506-0020-017	CAP,PF 2.2,100V,NPO,25
ACT	C50089	-.--	1620-2200-500	CAP,PF 22, 100V,CHIP,NPO
ACT	C50090	-.--	1506-0220-017	CAP,PF 22, 100V,NPO, 5
ACT	C50091	-.--	0002-0000-000	*** REF DESIG NOT USED ***

ASSY NO	REVISION	DESCRIPTION	LAST ECN	DATE INC
7010-4932-800	A1	PC BD ASSY-DISCR BD NO.1	8521	05/01/86

STAT	REF.DES.	QTY	COMP. PART NO.	DESCRIPTION
ACT	C50092	-.--	1521-0000-008	CAP,UF .10, 50V,DIP,Z5U
ACT	C50093	-.--	1521-0000-008	CAP,UF .10, 50V,DIP,Z5U
ACT	C50094	-.--	1506-0050-017	CAP,PF 5.5 100V,NPO 5
ACT	C50095	3.00	1506-0100-017	CAP,PF 10, 100V,NPO, 5
ACT	C50096	-.--	1506-0102-017	CAP,PF 1000, 100V,NPO, 5
ACT	C50097	-.--	1506-0102-017	CAP,PF 1000, 100V,NPO, 5
ACT	C50098	-.--	1507-0685-018	CAP,UF 6.8, 35V,TANT, 20
ACT	C50099	-.--	1507-0685-018	CAP,UF 6.8, 35V,TANT, 20
ACT	C50100	-.--	1506-0103-017	CAP,UF .010, 100V,CK05BX
ACT	C50101	-.--	1506-0050-017	CAP,PF 5.5 100V,NPO 5
ACT	C50102	-.--	1506-0050-017	CAP,PF 5.5 100V,NPO 5
ACT	C50103	-.--	1506-0102-017	CAP,PF 1000, 100V,NPO, 5
ACT	C50104	-.--	1506-0050-017	CAP,PF 5.5 100V,NPO 5
ACT	C50105	-.--	1506-0102-017	CAP,PF 1000, 100V,NPO, 5
ACT	C50106	-.--	1506-0050-017	CAP,PF 5.5 100V,NPO 5
ACT	C50107	-.--	1506-0050-017	CAP,PF 5.5 100V,NPO 5
ACT	C50108	-.--	1506-0050-017	CAP,PF 5.5 100V,NPO 5
ACT	C50109	-.--	1523-0000-002	CAP,PF 1800, 50V,CHIP,X7R
ACT	C50110	2.00	1506-0150-017	CAP,PF 15, 100V,NPO 5
ACT	C50111	-.--	1506-0050-017	CAP,PF 5.5 100V,NPO 5
ACT	C50112	-.--	1506-0100-017	CAP,PF 10, 100V,NPO, 5
ACT	C50113	-.--	1506-0102-017	CAP,PF 1000, 100V,NPO, 5
ACT	C50114	-.--	1506-0150-017	CAP,PF 15, 100V,NPO 5
ACT	C50115	-.--	1506-0102-017	CAP,PF 1000, 100V,NPO, 5
ACT	C50116	-.--	1506-0050-017	CAP,PF 5.5 100V,NPO 5
ACT	C50117	-.--	1506-0050-017	CAP,PF 5.5 100V,NPO 5
ACT	C50118	-.--	1506-0020-017	CAP,PF 2.2,100V,NPO,25
ACT	C50119	-.--	1506-0102-017	CAP,PF 1000, 100V,NPO, 5
ACT	C50120	-.--	1506-0050-017	CAP,PF 5.5 100V,NPO 5
ACT	C50121	1.00	1506-0010-017	CAP,PF 1.0, 100V,MICA, 50
ACT	C50122	-.--	1507-0685-018	CAP,UF 6.8, 35V,TANT, 20
ACT	C50123	-.--	1506-0050-017	CAP,PF 5.5 100V,NPO 5
ACT	C50124	-.--	0002-0000-000	*** REF DESIG NOT USED ***
ACT	C50125	-.--	0002-0000-000	*** REF DESIG NOT USED ***
ACT	C50126	-.--	1507-0685-018	CAP,UF 6.8, 35V,TANT, 20
ACT	C50127	-.--	1506-0050-017	CAP,PF 5.5 100V,NPO 5
ACT	C50128	-.--	1507-0685-018	CAP,UF 6.8, 35V,TANT, 20
ACT	C50129	2.00	1550-0300-500	CAP,VAR, 2.0- 8PF,350V,VPCM
ACT	C50130	-.--	1506-0102-017	CAP,PF 1000, 100V,NPO, 5
ACT	C50131	-.--	1506-0050-017	CAP,PF 5.5 100V,NPO 5
ACT	C50132	-.--	1521-0000-004	CAP,VAR, 0.6- 4.5PF,500V,7273
ACT	C50133	-.--	0002-0000-000	*** REF DESIG NOT USED ***
ACT	C50134	-.--	1550-0300-500	CAP,VAR, 2.0- 8PF,350V,VPCM
ACT	C50135	-.--	1506-0100-017	CAP,PF 10, 100V,NPO, 5
ACT	C50136	-.--	1506-0050-017	CAP,PF 5.5 100V,NPO 5
ACT	C50137	-.--	1506-0102-017	CAP,PF 1000, 100V,NPO, 5
ACT	C50138	-.--	1506-0102-017	CAP,PF 1000, 100V,NPO, 5
ACT	C50139	-.--	1506-0103-017	CAP,UF .010, 100V,CK05BX
ACT	C50140	-.--	1521-0000-008	CAP,UF .10, 50V,DIP,Z5U
ACT	C50141	-.--	0002-0000-000	*** REF DESIG NOT USED ***
ACT	C50142	-.--	1521-0000-008	CAP,UF .10, 50V,DIP,Z5U
ACT	C50143	-.--	1521-0000-008	CAP,UF .10, 50V,DIP,Z5U

ASSY NO.	REVISION	DESCRIPTION	LAST ECN	DATE INC
7010-4932-800	A1	PC BD ASSY-DISCR BD NO.1	8521	05/01/86

STAT	REF.DES.	QTY	COMP. PART NO.	DESCRIPTION
ACT	C50144	-.--	0002-0000-000	*** REF DESIG NOT USED ***
ACT	C50145	-.--	1506-0101-017	CAP,PF, 100, 100V,NPO, 5
ACT	C50146	-.--	1507-0685-018	CAP,UF 6.8, 35V,TANT, 20
ACT	C50147	-.--	1521-0000-008	CAP,UF .10, 50V,DIP,Z5U
ACT	C50148	-.--	1521-0000-008	CAP,UF .10, 50V,DIP,Z5U
ACT	CR50001	8.00	4815-0000-003	DIODE, 1N4148 ,SIGNAL, 75PRV
ACT	CR50002	-.--	4815-0000-003	DIODE, 1N4148 ,SIGNAL, 75PRV
ACT	CR50003	-.--	4815-0000-003	DIODE, 1N4148 ,SIGNAL, 75PRV
ACT	CR50004	-.--	4815-0000-003	DIODE, 1N4148 ,SIGNAL, 75PRV
ACT	CR50005	5.00	4816-0000-001	DIODE,5082-2800,S BAR, 70VBR
ACT	CR50006	-.--	4816-0000-001	DIODE,5082-2800,S BAR, 70VBR
ACT	CR50007	-.--	4816-0000-001	DIODE,5082-2800,S BAR, 70VBR
ACT	CR50008	-.--	4816-0000-001	DIODE,5082-2800,S BAR, 70VBR
ACT	CR50009	3.00	4831-0000-001	DIODE,FDH333 ,SIGNAL,HCLL
ACT	CR50010	-.--	4831-0000-001	DIODE,FDH333 ,SIGNAL,HCLL
ACT	CR50011	-.--	4831-0000-001	DIODE,FDH333 ,SIGNAL,HCLL
ACT	CR50012	5.00	4818-0000-015	DIODE,329C,6.9V ZENER REF
ACT	CR50013	1.00	4818-0000-003	DIODE, 1N5231B ,ZENER,5.1V,.5W
ACT	CR50014	-.--	4815-0000-003	DIODE, 1N4148 ,SIGNAL, 75PRV
ACT	CR50015	-.--	4815-0000-003	DIODE, 1N4148 ,SIGNAL, 75PRV
ACT	CR50016	-.--	4818-0000-015	DIODE,329C,6.9V ZENER REF
ACT	CR50017	1.00	4930-0100-200	DIODE,MV209 ,VARC, 29PF/-3V
ACT	CR50018	3.00	4825-0000-002	DIODE,PS083B ,PIN, .10PF, 3NS
ACT	CR50019	-.--	4825-0000-002	DIODE,PS083B ,PIN, 10PF, 3NS
ACT	CR50020	-.--	4825-0000-002	DIODE,PS083B ,PIN, .10PF, 3NS
ACT	CR50021	-.--	4815-0000-003	DIODE, 1N4148 ,SIGNAL, 75PRV
ACT	CR50028	-.--	4816-0000-001	DIODE,5082-2800,S BAR, 70VBR
ACT	CR50029	-.--	4815-0000-003	DIODE, 1N4148 ,SIGNAL, 75PRV
ACT	CR50030	-.--	4818-0000-015	DIODE,329C,6.9V ZENER REF
ACT	CR50031	-.--	4818-0000-015	DIODE,329C,6.9V ZENER REF
ACT	CR50032	-.--	4818-0000-015	DIODE,329C,6.9V ZENER REF
ACT	J50001	23.00	2200-2010-400	CONN,M SMB,PC MTG,STR,.453LG
ACT	J50002	1.00	2115-1002-015	CONN,MOLEX 22-05-2151
ACT	J50003	-.--	0002-0000-000	*** REF DESIG NOT USED ***
ACT	J50004	1.00	2129-1001-010	CONN,HEADER,10-P STR 609-1027
ACT	J50005	-.--	2200-2010-400	CONN,M SMB,PC MTG,STR, 453LG
ACT	J50006	-.--	2200-2010-400	CONN,M SMB,PC MTG,STR,.453LG
ACT	J50007	-.--	2200-2010-400	CONN,M SMB,PC MTG,STR,.453LG
ACT	J50008	-.--	2200-2010-400	CONN,M SMB,PC MTG,STR,.453LG
ACT	J50009	-.--	2200-2010-400	CONN,M SMB,PC MTG,STR,.453LG
ACT	J50010	-.--	2200-2010-400	CONN,M SMB,PC MTG,STR,.453LG
ACT	J50011	-.--	2200-2010-400	CONN,M SMB,PC MTG,STR,.453LG
ACT	J50012	-.--	2200-2010-400	CONN,M SMB,PC MTG,STR,.453LG
ACT	J50013	-.--	2200-2010-400	CONN,M SMB,PC MTG,STR,.453LG
ACT	J50014	-.--	2200-2010-400	CONN,M SMB,PC MTG,STR,.453LG
ACT	J50015	-.--	2200-2010-400	CONN,M SMB,PC MTG,STR,.453LG
ACT	J50016	-.--	2200-2010-400	CONN,M SMB,PC MTG,STR,.453LG
ACT	K50001	2.00	4501-0000-003	RELAY,DIP REED,SPDT, 12VDC, 2A
ACT	K50002	-.--	4501-0000-003	RELAY,DIP REED,SPDT, 12VDC, 2A
ACT	L50001	6.00	1801-0229-001	IND, 2.2 UH,.4 OHM,1025-28
ACT	L50002	14.00	1801-0109-001	IND, 1.0 UH, 1 OHM,1025-20
ACT	L50003	-.--	1801-0229-001	IND, 2.2 UH,.4 OHM,1025-28

ASSY NO.	REVISION	DESCRIPTION	LAST ECN	DATE INC
7010-4932-800	A1	PC BD ASSY-DISCR BD NO.1	8521	05/01/86

STAT	REF.DES.	QTY	COMP. PART NO.	DESCRIPTION	
ACT	L50004	12.00	1801-0337-002	IND, .033UH, .035OHM102604	
ACT	L50005	-.--	1801-0109-001	IND, 1.0 UH, 1 OHM,1025-20	
ACT	L50006	-.--	1801-0337-002	IND, .033UH, .035OHM102604	
ACT	L50007	.00	1050-0000-071	WIRE,BUS,TINNED COPPER,18GA	*** Q
ACT	L50008	-.--	1801-0337-002	IND, .033UH, .035OHM102604	
ACT	L50009	-.--	1801-0229-001	IND, 2.2 UH, .4 OHM,1025-28	
ACT	L50010	-.--	1801-0337-002	IND, .033UH, .035OHM102604	
ACT	L50011	-.--	1801-0337-002	IND, .033UH, .035OHM102604	
ACT	L50012	3.00	1801-0108-001	IND, .10UH, .080HM,1025-94	
ACT	L50013	-.--	1801-0229-001	IND, 2.2 UH, .4 OHM,1025-28	
ACT	L50014	-.--	1801-0109-001	IND, 1.0 UH, 1 OHM,1025-20	
ACT	L50015	-.--	1801-0108-001	IND, .10UH, .080HM,1025-94	
ACT	L50016	9.00	0003-0000-000	***** FOR REFERENCE ONLY *****	*** C
ACT	L50017	-.--	1801-0108-001	IND, .10UH, .080HM,1025-94	
ACT	L50018	2.00	1801-0478-001	IND, .47UH, .350HM,1025-12	
ACT	L50019	-.--	0003-0000-000	***** FOR REFERENCE ONLY *****	
ACT	L50020	4.00	1806-0108-002	IND, .1 UH, .130HM,0819-00	
ACT	L50021	-.--	0002-0000-000	*** REF DESIG NOT USED ***	
ACT	L50022	-.--	1806-0108-002	IND, .1 UH, 130HM,0819-00	
ACT	L50023	-.--	1801-0109-001	IND, 1.0 UH, 1 OHM,1025-20	
ACT	L50024	-.--	1801-0229-001	IND, 2.2 UH, 4 OHM,1025-28	
ACT	L50025	-.--	1801-0478-001	IND, .47UH, .350HM,1025-12	
ACT	L50026	-.--	1801-0229-001	IND, 2.2 UH, .4 OHM,1025-28	
ACT	L50027	-.--	1801-0109-001	IND, 1.0 UH, 1 OHM,1025-20	
ACT	L50028	-.--	1801-0337-002	IND, .033UH, .035OHM102604	
ACT	L50029	-.--	1801-0109-001	IND, 1.0 UH, 1 OHM,1025-20	
ACT	L50030	-.--	1801-0337-002	IND, .033UH, .035OHM102604	
ACT	L50031	-.--	0003-0000-000	***** FOR REFERENCE ONLY *****	
ACT	L50032	-.--	1801-0109-001	IND, 1.0 UH, 1 OHM,1025-20	
ACT	L50033	-.--	0003-0000-000	***** FOR REFERENCE ONLY *****	
ACT	L50034	-.--	1801-0109-001	IND, 1.0 UH, 1 OHM,1025-20	
ACT	L50035	-.--	1801-0109-001	IND, 1.0 UH, 1 OHM,1025-20	
ACT	L50036	-.--	1801-0337-002	IND, .033UH, .035OHM102604	
ACT	L50037	-.--	0003-0000-000	***** FOR REFERENCE ONLY *****	
ACT	L50038	-.--	1801-0109-001	IND, 1.0 UH, 1 OHM,1025-20	
ACT	L50039	-.--	1801-0337-002	IND, .033UH, .035OHM102604	
ACT	L50040	-.--	1801-0109-001	IND, 1.0 UH, 1 OHM,1025-20	
ACT	L50041	-.--	1801-0337-002	IND, .033UH, .035OHM102604	
ACT	L50042	-.--	1801-0337-002	IND, .033UH, .035OHM102604	
ACT	L50043	-.--	0003-0000-000	***** FOR REFERENCE ONLY *****	
ACT	L50044	-.--	0003-0000-000	***** FOR REFERENCE ONLY *****	
ACT	L50045	-.--	1801-0109-001	IND, 1.0 UH, 1 OHM,1025-20	
ACT	L50046	-.--	0003-0000-000	***** FOR REFERENCE ONLY *****	
ACT	L50047	-.--	0002-0000-000	*** REF DESIG NOT USED ***	
ACT	L50048	-.--	0002-0000-000	*** REF DESIG NOT USED ***	
ACT	L50049	-.--	1806-0108-002	IND, .1 UH, .130HM,0819-00	
ACT	L50050	-.--	1801-0337-002	IND, .033UH, .035OHM102604	
ACT	L50051	-.--	0003-0000-000	***** FOR REFERENCE ONLY *****	
ACT	L50052	-.--	1801-0109-001	IND, 1.0 UH, 1 OHM,1025-20	
ACT	L50053	-.--	1801-0109-001	IND, 1.0 UH, 1 OHM,1025-20	
ACT	L50054	.00	1050-0000-076	WIRE,BUS,TINNED COPPER,28GA	*** QTY
ACT	L50055	-.--	1050-0000-076	WIRE,BUS,TINNED COPPER,28GA	

ASSY NO	REVISION	DESCRIPTION	LAST ECN	DATE INC
7010-4932-000	A1	PC BD ASSY-DISCR BD NO.1	8521	05/01/86

STAT	REF DES	QTY	COMP. PART NO.	DESCRIPTION
ACT	L50058	-.--	1806-0108-002	IND, .1 UH, .130HM, 0819-00
ACT	MXR50001	2.00	5250-0804-301	MIXER, M43T-1, 700-1500MHZ, TO-8
ACT	MXR50002	-.--	5250-0804-301	MIXER, M43T-1, 700-1500MHZ, TO-8
ACT	MXR50003	1.00	5250-0000-002	MIXER, DBL BAL, FLTPK, 5-1000MHZ
ACT	Q50001	1.00	4805-0000-003	TRANS, 2N3646 , NPN HS SW
ACT	Q50002	14.00	4807-0000-002	TRANS, 2N3905 , PNP HS SW
ACT	Q50003	-.--	4807-0000-002	TRANS, 2N3905 , PNP HS SW
ACT	Q50004	8.00	4807-0000-001	TRANS, 2N3903 , NPN HS SW
ACT	Q50005	-.--	4807-0000-002	TRANS, 2N3905 , PNP HS SW
ACT	Q50006	-.--	4807-0000-002	TRANS, 2N3905 , PNP HS SW
ACT	Q50007	-.--	4807-0000-001	TRANS, 2N3903 , NPN HS SW
ACT	Q50008	-.--	4807-0000-002	TRANS, 2N3905 , PNP HS SW
ACT	Q50009	-.--	4807-0000-002	TRANS, 2N3905 , PNP HS SW
ACT	Q50010	6.00	4809-0000-005	TRANS, 66382 , NPN HF AMP
ACT	Q50011	-.--	4807-0000-002	TRANS, 2N3905 , PNP HS SW
ACT	Q50012	-.--	4807-0000-001	TRANS, 2N3903 , NPN HS SW
ACT	Q50013	-.--	4807-0000-002	TRANS, 2N3905 , PNP HS SW
ACT	Q50014	-.--	4807-0000-001	TRANS, 2N3903 , NPN HS SW
ACT	Q50015	-.--	4807-0000-002	TRANS, 2N3905 , PNP HS SW
ACT	Q50016	1.00	4801-0000-001	TRANS, 2N2222 , NPN HS SW
ACT	Q50017	1.00	4805-0000-001	TRANS, 2N2907A, PNP HS SW (3251)
ACT	Q50018	-.--	4809-0000-005	TRANS, 66382 , NPN HF AMP
ACT	Q50019	4.00	4803-0000-004	TRANS, MRF911 , NPN HF AMP SW
ACT	Q50020	8.00	5010-0203-100	TRANS, HXTR-3101, NPN HF AMP
ACT	Q50021	-.--	5010-0203-100	TRANS, HXTR-3101, NPN HF AMP
ACT	Q50022	-.--	4803-0000-004	TRANS, MRF911 , NPN HF AMP SW
ACT	Q50023	-.--	0002-0000-000	*** REF DESIG NOT USED ***
ACT	Q50024	-.--	0002-0000-000	*** REF DESIG NOT USED ***
ACT	Q50025	-.--	0002-0000-000	*** REF DESIG NOT USED ***
ACT	Q50026	-.--	4807-0000-002	TRANS, 2N3905 , PNP HS SW
ACT	Q50027	-.--	4807-0000-001	TRANS, 2N3903 , NPN HS SW
ACT	Q50028	-.--	5010-0203-100	TRANS, HXTR-3101, NPN HF AMP
ACT	Q50029	-.--	5010-0203-100	TRANS, HXTR-3101, NPN HF AMP
ACT	Q50030	1.00	5050-2401-000	TRANS, VN10KM , N-CH VMOSFET
ACT	Q50031	-.--	4807-0000-001	TRANS, 2N3903 , NPN HS SW
ACT	Q50032	-.--	5010-0203-100	TRANS, HXTR-3101, NPN HF AMP
ACT	Q50033	-.--	5010-0203-100	TRANS, HXTR-3101, NPN HF AMP
ACT	Q50034	-.--	4809-0000-005	TRANS, 66382 , NPN HF AMP
ACT	Q50035	-.--	4807-0000-002	TRANS, 2N3905 , PNP HS SW
ACT	Q50036	-.--	4803-0000-004	TRANS, MRF911 , NPN HF AMP SW
ACT	Q50037	-.--	5010-0203-100	TRANS, HXTR-3101, NPN HF AMP
ACT	Q50038	-.--	4809-0000-005	TRANS, 66382 , NPN HF AMP
ACT	Q50039	-.--	4803-0000-004	TRANS, MRF911 , NPN HF AMP SW
ACT	Q50040	-.--	4807-0000-002	TRANS, 2N3905 , PNP HS SW
ACT	Q50041	-.--	4807-0000-001	TRANS, 2N3903 , NPN HS SW
ACT	Q50042	-.--	4807-0000-002	TRANS, 2N3905 , PNP HS SW
ACT	Q50043	-.--	4807-0000-001	TRANS, 2N3903 , NPN HS SW
ACT	Q50044	-.--	5010-0203-100	TRANS, HXTR-3101, NPN HF AMP
ACT	Q50045	-.--	4809-0000-005	TRANS, 66382 , NPN HF AMP
ACT	Q50046	-.--	4809-0000-005	TRANS, 66382 , NPN HF AMP
ACT	Q50047	-.--	4807-0000-002	TRANS, 2N3905 , PNP HS SW
ACT	Q50048	1.00	4801-0000-004	TRANS, 2N2905 , PNP HS SW

ASSY NO	REVISION	DESCRIPTION	LAST ECN	DATE INC
7010-4932-800	A1	PC BD ASSY-DISCR BD NO.1	8521	05/01/86

STAT	REF DES	QTY	COMP. PART NO.	DESCRIPTION
ACT	R50001	6.00	4701-0680-003	RES, 5, 1/8W, 68 OHM
ACT	R50002	16.00	4701-0101-003	RES, 5, 1/8W, 100 OHM
ACT	R50003	8.00	4701-0331-003	RES, 5, 1/8W, 330 OHM
ACT	R50004	-.--	4701-0331-003	RES, 5, 1/8W, 330 OHM
ACT	R50005	3.00	4701-0122-003	RES, 5, 1/8W, 1.2K OHM
ACT	R50006	7.00	4701-0681-003	RES, 5, 1/8W, 680 OHM
ACT	R50007	12.00	4701-0222-003	RES, 5, 1/8W, 2.2K OHM
ACT	R50008	-.--	4701-0101-003	RES, 5, 1/8W, 100 OHM
ACT	R50009	-.--	4701-0222-003	RES, 5, 1/8W, 2.2K OHM
ACT	R50010	16.00	4701-0471-003	RES, 5, 1/8W, 470 OHM
ACT	R50011	-.--	4701-0222-003	RES, 5, 1/8W, 2.2K OHM
ACT	R50012	1.00	4752-0102-002	POT, 1K OHM, 62-1-1-102
ACT	R50013	2.00	4701-0121-003	RES, 5, 1/8W, 120 OHM
ACT	R50014	11.00	4701-0103-003	RES, 5, 1/8W, 10K OHM
ACT	R50015	3.00	4701-0272-003	RES, 5, 1/8W, 2.7K OHM
ACT	R50016	3.00	4701-0183-003	RES, 5, 1/8W, 18K OHM
ACT	R50017	11.00	4701-0102-003	RES, 5, 1/8W, 1.0K OHM
ACT	R50018	-.--	4701-0331-003	RES, 5, 1/8W, 330 OHM
ACT	R50019	5.00	4701-0330-003	RES, 5, 1/8W, 33 OHM
ACT	R50020	-.--	4701-0331-003	RES, 5, 1/8W, 330 OHM
ACT	R50021	-.--	4701-0681-003	RES, 5, 1/8W, 680 OHM
ACT	R50022	-.--	4701-0102-003	RES, 5, 1/8W, 1.0K OHM
ACT	R50023	5.00	4701-0223-003	RES, 5, 1/8W, 22K OHM
ACT	R50024	-.--	4701-0331-003	RES, 5, 1/8W, 330 OHM
ACT	R50025	-.--	4701-0103-003	RES, 5, 1/8W, 10K OHM
ACT	R50026	2.00	4706-1002-001	RES, 1, 1/4W, 10.0K OHM
ACT	R50027	-.--	4701-0681-003	RES, 5, 1/8W, 680 OHM
ACT	R50028	-.--	4706-1002-001	RES, 1, 1/4W, 10.0K OHM
ACT	R50029	7.00	4701-0181-003	RES, 5, 1/8W, 180 OHM
ACT	R50030	-.--	4701-0103-003	RES, 5, 1/8W, 10K OHM
ACT	R50031	-.--	4701-0103-003	RES, 5, 1/8W, 10K OHM
ACT	R50032	-.--	4701-0103-003	RES, 5, 1/8W, 10K OHM
ACT	R50033	-.--	4701-0181-003	RES, 5, 1/8W, 180 OHM
ACT	R50034	7.00	4701-0470-003	RES, 5, 1/8W, 47 OHM
ACT	R50035	4.00	4701-0271-003	RES, 5, 1/8W, 270 OHM
ACT	R50036	-.--	4701-0101-003	RES, 5, 1/8W, 100 OHM
ACT	R50037	-.--	4701-0101-003	RES, 5, 1/8W, 100 OHM
ACT	R50038	-.--	4701-0103-003	RES, 5, 1/8W, 10K OHM
ACT	R50039	3.00	4701-0123-003	RES, 5, 1/8W, 12K OHM
ACT	R50040	-.--	4701-0101-003	RES, 5, 1/8W, 100 OHM
ACT	R50041	5.00	4701-0472-003	RES, 5, 1/8W, 4.7K OHM
ACT	R50042	-.--	4701-0331-003	RES, 5, 1/8W, 330 OHM
ACT	R50043	-.--	4701-0101-003	RES, 5, 1/8W, 100 OHM
ACT	R50044	-.--	4701-0472-003	RES, 5, 1/8W, 4.7K OHM
ACT	R50045	-.--	4701-0103-003	RES, 5, 1/8W, 10K OHM
ACT	R50046	-.--	4701-0330-003	RES, 5, 1/8W, 33 OHM
ACT	R50047	-.--	4701-0183-003	RES, 5, 1/8W, 18K OHM
ACT	R50048	-.--	4701-0101-003	RES, 5, 1/8W, 100 OHM
ACT	R50049	-.--	4701-0122-003	RES, 5, 1/8W, 1.2K OHM
ACT	R50050	-.--	4701-0122-003	RES, 5, 1/8W, 1.2K OHM
ACT	R50051	-.--	0002-0000-000	*** REF DESIG NOT USED ***
ACT	R50052	-.--	4701-0101-003	RES, 5, 1/8W, 100 OHM

ASSY NO	REVISION	DESCRIPTION	LAST ECN	DATE INC
7010-4932-800	A1	PC BD ASSY-DISCR BD NO.1	8521	05/01/86

STAT	REF.DES.	QTY	COMP. PART NO.	DESCRIPTION
ACT	R50053	-.--	4701-0222-003	RES, 5, 1/8W, 2.2K OHM
ACT	R50054	-.--	4701-0330-003	RES, 5, 1/8W, 33 OHM
ACT	R50055	-.--	4701-0101-003	RES, 5, 1/8W, 100 OHM
ACT	R50056	8.00	4701-0473-003	RES, 5, 1/8W, 47K OHM
ACT	R50057	5.00	4701-0152-003	RES, 5, 1/8W, 1.5K OHM
ACT	R50058	-.--	4701-0473-003	RES, 5, 1/8W, 47K OHM
ACT	R50059	-.--	4701-0152-003	RES, 5, 1/8W, 1.5K OHM
ACT	R50060	3.00	4752-0503-002	POT, 50K OHM, 62-1-1-503
ACT	R50061	1.00	4701-0822-003	RES, 5, 1/8W, 8.2K OHM
ACT	R50062	-.--	4701-0102-003	RES, 5, 1/8W, 1.0K OHM
ACT	R50063	-.--	4701-0101-003	RES, 5, 1/8W, 100 OHM
ACT	R50064	-.--	4701-0473-003	RES, 5, 1/8W, 47K OHM
ACT	R50065	-.--	4752-0503-002	POT, 50K OHM, 62-1-1-503
ACT	R50066	-.--	4701-0330-003	RES, 5, 1/8W, 33 OHM
ACT	R50067	-.--	4701-0183-003	RES, 5, 1/8W, 18K OHM
ACT	R50068	-.--	4701-0222-003	RES, 5, 1/8W, 2.2K OHM
ACT	R50069	1.00	4752-0203-002	POT, 20K OHM, 62-1-1-203
ACT	R50070	-.--	4701-0472-003	RES, 5, 1/8W, 4.7K OHM
ACT	R50071	2.00	4701-0823-003	RES, 5, 1/8W, 82K OHM
ACT	R50072	3.00	4701-0273-003	RES, 5, 1/8W, 27K OHM
ACT	R50073	-.--	4701-0272-003	RES, 5, 1/8W, 2.7K OHM
ACT	R50074	-.--	4701-0472-003	RES, 5, 1/8W, 4.7K OHM
ACT	R50075	1.00	4701-0563-003	RES, 5, 1/8W, 56K OHM
ACT	R50076	5.00	4701-0561-003	RES, 5, 1/8W, 560 OHM
ACT	R50077	1.00	4752-0103-002	POT, 10K OHM, 62-1-1-103
ACT	R50078	-.--	4701-0103-003	RES, 5, 1/8W, 10K OHM
ACT	R50079	-.--	4701-0331-003	RES, 5, 1/8W, 330 OHM
ACT	R50080	4.00	4701-0104-003	RES, 5, 1/8W, 100K OHM
ACT	R50081	1.00	4701-0334-003	RES, 5, 1/8W, 330K OHM
ACT	R50082	-.--	4701-0223-003	RES, 5, 1/8W, 22K OHM
ACT	R50083	-.--	4701-0272-003	RES, 5, 1/8W, 2.7K OHM
ACT	R50084	9.00	4701-0221-003	RES, 5, 1/8W, 220 OHM
ACT	R50085	-.--	4701-0152-003	RES, 5, 1/8W, 1.5K OHM
ACT	R50086	-.--	4701-0103-003	RES, 5, 1/8W, 10K OHM
ACT	R50087	-.--	4701-0104-003	RES, 5, 1/8W, 100K OHM
ACT	R50088	-.--	4701-0471-003	RES, 5, 1/8W, 470 OHM
ACT	R50089	1.00	4701-0124-003	RES, 5, 1/8W, 120K OHM
ACT	R50090	1.00	4752-0104-002	POT, 100K OHM, 62-1-1-104
ACT	R50091	-.--	4701-0104-003	RES, 5, 1/8W, 100K OHM
ACT	R50092	-.--	4701-0102-003	RES, 5, 1/8W, 1.0K OHM
ACT	R50093	-.--	4701-0223-003	RES, 5, 1/8W, 22K OHM
ACT	R50094	-.--	4701-0271-003	RES, 5, 1/8W, 270 OHM
ACT	R50095	-.--	4701-0823-003	RES, 5, 1/8W, 82K OHM
ACT	R50096	-.--	4701-0221-003	RES, 5, 1/8W, 220 OHM
ACT	R50097	-.--	4701-0221-003	RES, 5, 1/8W, 220 OHM
ACT	R50098	-.--	4701-0472-003	RES, 5, 1/8W, 4.7K OHM
ACT	R50099	-.--	4701-0102-003	RES, 5, 1/8W, 1.0K OHM
ACT	R50100	-.--	4701-0123-003	RES, 5, 1/8W, 12K OHM
ACT	R50101	-.--	4701-0273-003	RES, 5, 1/8W, 27K OHM
ACT	R50102	-.--	4701-0221-003	RES, 5, 1/8W, 220 OHM
ACT	R50103	-.--	4701-0471-003	RES, 5, 1/8W, 470 OHM
ACT	R50104	3.00	4701-0560-003	RES, 5, 1/8W, 56 OHM

ASSY NO.	REVISION	DESCRIPTION	LAST ECN	DATE INC
7010-4932-800	A1	PC BD ASSY-DISCR BD NO 1	8521	05/01/86

STAT	REF DES	QTY	COMP. PART NO.	DESCRIPTION
ACT	R50105	-.--	4701-0271-003	RES, 5, 1/8W, 270 OHM
ACT	R50106	-.--	4701-0271-003	RES, 5, 1/8W, 270 OHM
ACT	R50107	-.--	4701-0471-003	RES, 5, 1/8W, 470 OHM
ACT	R50108	6.00	4701-0151-003	RES, 5, 1/8W, 150 OHM
ACT	R50109 SAT	-.--	4701-0101-003	RES, 5, 1/8W, 100 OHM
ACT	R50110	5.00	4701-0390-003	RES, 5, 1/8W, 39 OHM
ACT	R50111	-.--	4701-0151-003	RES, 5, 1/8W, 150 OHM
ACT	R50112	-.--	4701-0471-003	RES, 5, 1/8W, 470 OHM
ACT	R50113	-.--	4701-0223-003	RES, 5, 1/8W, 22K OHM
ACT	R50114 SAT	-.--	4701-0151-003	RES, 5, 1/8W, 150 OHM
ACT	R50115	-.--	4701-0680-003	RES, 5, 1/8W, 68 OHM
ACT	R50116	-.--	4701-0471-003	RES, 5, 1/8W, 470 OHM
ACT	R50117	-.--	4701-0181-003	RES, 5, 1/8W, 180 OHM
ACT	R50118	2.00	4702-0181-003	RES, 5, 1/4W, 180 OHM
ACT	R50119	-.--	4701-0560-003	RES, 5, 1/8W, 56 OHM
ACT	R50120	-.--	4701-0181-003	RES, 5, 1/8W, 180 OHM
ACT	R50121	-.--	4701-0330-003	RES, 5, 1/8W, 33 OHM
ACT	R50122	-.--	4701-0560-003	RES, 5, 1/8W, 56 OHM
ACT	R50123	-.--	4701-0561-003	RES, 5, 1/8W, 560 OHM
ACT	R50124	-.--	4701-0473-003	RES, 5, 1/8W, 47K OHM
ACT	R50125	-.--	4701-0181-003	RES, 5, 1/8W, 180 OHM
ACT	R50126	-.--	4702-0181-003	RES, 5, 1/4W, 180 OHM
ACT	R50127	-.--	0002-0000-000	*** REF DESIG NOT USED ***
ACT	R50128	-.--	0002-0000-000	*** REF DESIG NOT USED ***
ACT	R50129	-.--	4701-0223-003	RES, 5, 1/8W, 22K OHM
ACT	R50130	-.--	0002-0000-000	*** REF DESIG NOT USED ***
ACT	R50131	-.--	4701-0331-003	RES, 5, 1/8W, 330 OHM
ACT	R50132	-.--	4701-0471-003	RES, 5, 1/8W, 470 OHM
ACT	R50133	-.--	4701-0471-003	RES, 5, 1/8W, 470 OHM
ACT	R50134	-.--	4701-0121-003	RES, 5, 1/8W, 120 OHM
ACT	R50135	-.--	0002-0000-000	*** REF DESIG NOT USED ***
ACT	R50136	-.--	4701-0390-003	RES, 5, 1/8W, 39 OHM
ACT	R50137	-.--	4701-0151-003	RES, 5, 1/8W, 150 OHM
ACT	R50138	1.00	4701-0392-003	RES, 5, 1/8W, 3.9K OHM
ACT	R50139	-.--	4701-0221-003	RES, 5, 1/8W, 220 OHM
ACT	R50140	-.--	4701-0471-003	RES, 5, 1/8W, 470 OHM
ACT	R50141	-.--	4701-0151-003	RES, 5, 1/8W, 150 OHM
ACT	R50142	-.--	4701-0103-003	RES, 5, 1/8W, 10K OHM
ACT	R50143	-.--	0002-0000-000	*** REF DESIG NOT USED ***
ACT	R50144	-.--	4701-0222-003	RES, 5, 1/8W, 2.2K OHM
ACT	R50145	-.--	4701-0390-003	RES, 5, 1/8W, 39 OHM
ACT	R50146	-.--	4701-0470-003	RES, 5, 1/8W, 47 OHM
ACT	R50147	-.--	4701-0473-003	RES, 5, 1/8W, 47K OHM
ACT	R50148	-.--	4701-0680-003	RES, 5, 1/8W, 68 OHM
ACT	R50149	-.--	4701-0561-003	RES, 5, 1/8W, 560 OHM
ACT	R50150	-.--	4701-0470-003	RES, 5, 1/8W, 47 OHM
ACT	R50151	-.--	4701-0681-003	RES, 5, 1/8W, 680 OHM
ACT	R50152	-.--	4701-0471-003	RES, 5, 1/8W, 470 OHM
ACT	R50153	-.--	4701-0470-003	RES, 5, 1/8W, 47 OHM
ACT	R50154	-.--	4701-0470-003	RES, 5, 1/8W, 47 OHM
ACT	R50155	-.--	4701-0222-003	RES, 5, 1/8W, 2.2K OHM
ACT	R50156	-.--	4701-0152-003	RES, 5, 1/8W, 1.5K OHM

ASSY NO	REVISION	DESCRIPTION	LAST ECN	DATE INC
7010-4932-800	A1	PC BD ASSY-DISCR BD NO.1	8521	05/01/86

STAT	REF DES	QTY	COMP. PART NO	DESCRIPTION
ACT	R50157	-.--	4701-0471-003	RES, 5, 1/8W, 470 OHM
ACT	R50158	-.--	4752-0503-002	POT, 50K OHM, 62-1-1-503
ACT	R50159	-.--	4701-0473-003	RES, 5, 1/8W, 47K OHM
ACT	R50160	2.00	4701-0150-003	RES, 5, 1/8W, 15 OHM
ACT	R50161	-.--	4701-0681-003	RES, 5, 1/8W, 680 OHM
ACT	R50162	-.--	4701-0103-003	RES, 5, 1/8W, 10K OHM
ACT	R50163	-.--	4701-0681-003	RES, 5, 1/8W, 680 OHM
ACT	R50164	-.--	4701-0222-003	RES, 5, 1/8W, 2.2K OHM
ACT	R50165	-.--	4701-0680-003	RES, 5, 1/8W, 68 OHM
ACT	R50166	-.--	4701-0101-003	RES, 5, 1/8W, 100 OHM
ACT	R50167	-.--	4701-0561-003	RES, 5, 1/8W, 560 OHM
ACT	R50168	-.--	4701-0390-003	RES, 5, 1/8W, 39 OHM
ACT	R50169	-.--	4701-0101-003	RES, 5, 1/8W, 100 OHM
ACT	R50170	-.--	4701-0221-003	RES, 5, 1/8W, 220 OHM
ACT	R50171	-.--	4701-0473-003	RES, 5, 1/8W, 47K OHM
ACT	R50172	-.--	4701-0473-003	RES, 5, 1/8W, 47K OHM
ACT	R50173	-.--	4701-0150-003	RES, 5, 1/8W, 15 OHM
ACT	R50174	-.--	4701-0102-003	RES, 5, 1/8W, 1.0K OHM
ACT	R50175	-.--	4701-0102-003	RES, 5, 1/8W, 1.0K OHM
ACT	R50176	-.--	4701-0681-003	RES, 5, 1/8W, 680 OHM
ACT	R50177	-.--	4701-0680-003	RES, 5, 1/8W, 68 OHM
ACT	R50178	-.--	4701-0221-003	RES, 5, 1/8W, 220 OHM
ACT	R50179	-.--	4701-0471-003	RES, 5, 1/8W, 470 OHM
ACT	R50180	-.--	4701-0273-003	RES, 5, 1/8W, 27K OHM
ACT	R50181	-.--	4701-0102-003	RES, 5, 1/8W, 1.0K OHM
ACT	R50182	1.00	4752-0501-002	POT, 500 OHM, 62-1-1-501
ACT	R50183	-.--	4701-0470-003	RES, 5, 1/8W, 47 OHM
ACT	R50184	-.--	4701-0101-003	RES, 5, 1/8W, 100 OHM
ACT	R50185	-.--	4701-0471-003	RES, 5, 1/8W, 470 OHM
ACT	R50186	-.--	4701-0102-003	RES, 5, 1/8W, 1.0K OHM
ACT	R50187	-.--	4701-0102-003	RES, 5, 1/8W, 1.0K OHM
ACT	R50188	-.--	4701-0222-003	RES, 5, 1/8W, 2.2K OHM
ACT	R50189	-.--	4701-0390-003	RES, 5, 1/8W, 39 OHM
ACT	R50190	-.--	4701-0102-003	RES, 5, 1/8W, 1.0K OHM
ACT	R50191	-.--	4701-0561-003	RES, 5, 1/8W, 560 OHM
ACT	R50193	-.--	4701-0101-003	RES, 5, 1/8W, 100 OHM
ACT	R50194	-.--	4701-0471-003	RES, 5, 1/8W, 470 OHM
ACT	R50195	-.--	4701-0101-003	RES, 5, 1/8W, 100 OHM
ACT	R50196	-.--	4701-0471-003	RES, 5, 1/8W, 470 OHM
ACT	R50197	-.--	4701-0104-003	RES, 5, 1/8W, 100K OHM
ACT	R50198	-.--	4701-0680-003	RES, 5, 1/8W, 68 OHM
ACT	R50199	-.--	4701-0152-003	RES, 5, 1/8W, 1.5K OHM
ACT	R50200	-.--	4701-0471-003	RES, 5, 1/8W, 470 OHM
ACT	R50201	-.--	4701-0123-003	RES, 5, 1/8W, 12K OHM
ACT	R50202	-.--	0002-0000-000	*** REF DESIG NOT USED ***
ACT	R50203	-.--	4701-0470-003	RES, 5, 1/8W, 47 OHM
ACT	R50204	-.--	4701-0181-003	RES, 5, 1/8W, 180 OHM
ACT	R50205	-.--	4701-0181-003	RES, 5, 1/8W, 180 OHM
ACT	R50206	-.--	4701-0221-003	RES, 5, 1/8W, 220 OHM
ACT	R50207	-.--	4701-0221-003	RES, 5, 1/8W, 220 OHM
ACT	R50208	-.--	4701-0222-003	RES, 5, 1/8W, 2.2K OHM
ACT	R50209	-.--	4701-0151-003	RES, 5, 1/8W, 150 OHM

ASSY NO	REVISION	DESCRIPTION	LAST ECN	DATE INC
7010-4932-800	A1	PC BD ASSY-DISCR BD NO.1	8521	05/01/86

STAT	REF DES	QTY	COMP. PART NO	DESCRIPTION
ACT	R50210	-.--	4701-0222-003	RES, 5, 1/8W, 2.2K OHM
ACT	R50211	-.--	4701-0222-003	RES, 5, 1/8W, 2.2K OHM
ACT	T50001	-.--	0003-0000-000	***** FOR REFERENCE ONLY *****
ACT	T50002	-.--	0002-0000-000	*** REF DESIG NOT USED ***
ACT	TP50001	-.--	2200-2010-400	CONN,M SMB,PC MTG,STR,.453LG
ACT	TP50002	-.--	2200-2010-400	CONN,M SMB,PC MTG,STR,.453LG
ACT	TP50003	-.--	2200-2010-400	CONN,M SMB,PC MTG,STR,.453LG
ACT	TP50004	-.--	2200-2010-400	CONN,M SMB,PC MTG,STR,.453LG
ACT	TP50005	-.--	2200-2010-400	CONN,M SMB,PC MTG,STR,.453LG
ACT	TP50006	-.--	2200-2010-400	CONN,M SMB,PC MTG,STR,.453LG
ACT	TP50007	-.--	2200-2010-400	CONN,M SMB,PC MTG,STR,.453LG
ACT	TP50008	-.--	2200-2010-400	CONN,M SMB,PC MTG,STR,.453LG
ACT	TP50009	-.--	0002-0000-000	*** REF DESIG NOT USED ***
ACT	TP50010	7.00	2114-0000-007	POST,GANG,PCB,.025SQ,.443LG
ACT	TP50011	-.--	2114-0000-007	POST,GANG,PCB,.025SQ,.443LG
ACT	TP50012	-.--	2114-0000-007	POST,GANG,PCB,.025SQ,.443LG
ACT	TP50013	-.--	2114-0000-007	POST,GANG,PCB,.025SQ,.443LG
ACT	TP50014	-.--	2114-0000-007	POST,GANG,PCB,.025SQ,.443LG
ACT	TP50015	-.--	2114-0000-007	POST,GANG,PCB,.025SQ,.443LG
ACT	TP50016	-.--	2114-0000-007	POST,GANG,PCB,.025SQ,.443LG
ACT	TP50017	-.--	0002-0000-000	*** REF DESIG NOT USED ***
ACT	TP50018	-.--	2200-2010-400	CONN,M SMB,PC MTG,STR,.453LG
ACT	TP50019	-.--	0002-0000-000	*** REF DESIG NOT USED ***
ACT	TP50020	-.--	2200-2010-400	CONN,M SMB,PC MTG,STR,.453LG
ACT	U50001	1.00	3132-0000-004	IC,74S04,HEX INVERTER
ACT	U50002	1.00	3132-0000-001	IC,74S00,QUAD 2-INPUT NAND
ACT	U50003	1.00	3131-0000-044	IC,74LS00,QUAD 2-INPUT NAND
ACT	U50004	1.00	3131-0000-038	IC,74LS74A,DUAL D FLIP-FLOP
ACT	U50005	1.00	3211-3161-000	IC,74LS161,SYNC 4-BIT BIN CTR
ACT	U50006	-.--	0002-0000-000	*** REF DESIG NOT USED ***
ACT	U50007	1.00	3221-0001-000	IC,353,DUAL JFET OP AMP
ACT	U50008	2.00	3214-4098-100	IC,4098B,DUAL MULTIVIBRATOR
ACT	U50009	1.00	3133-0000-004	IC,4027B,DUAL JK MS FLIP-FLOP
ACT	U50010	5.00	3133-0000-024	IC,3130,BIMOS OP AMP,PLAST DIP
ACT	U50011	1.00	3133-0000-001	IC,4001B,QUAD 2-INPUT NOR
ACT	U50012	2.00	3133-0000-007	IC,4066B,QUAD BILATERAL SWITCH
ACT	U50013	-.--	3133-0000-024	IC,3130,BIMOS OP AMP,PLAST DIP
ACT	U50014	-.--	3214-4098-100	IC,4098B,DUAL MULTIVIBRATOR
ACT	U50015	-.--	3133-0000-007	IC,4066B,QUAD BILATERAL SWITCH
ACT	U50016	-.--	3133-0000-024	IC,3130,BIMOS OP AMP,PLAST DIP
ACT	U50017	-.--	3133-0000-024	IC,3130,BIMOS OP AMP,PLAST DIP
ACT	U50018	1.00	3133-0000-011	IC,4011B,QUAD 2-INPUT NAND
ACT	U50019	-.--	3133-0000-024	IC,3130,BIMOS OP AMP,PLAST DIP
ACT	U50020	3.00	5050-2501-100	IC,MSA-0335-22,IC AMP
ACT	U50021	-.--	5050-2501-100	IC,MSA-0335-22,IC AMP
ACT	U50022	-.--	5050-2501-100	IC,MSA-0335-22,IC AMP

ASSY NO	REVISION	DESCRIPTION	LAST ECN	DATE INC.
7002-4941-500	A	FINAL ASSY,RD-301		10/30/71

STAT	REF DES.	QTY	COMP PART NO.	DESCRIPTION
ACT		.00	DWG-0000-4900-100	DWG,PRODUCT STRUCTURE,RD-301
ACT	*01	1.00	7067-4941-100	KIT,RD-301 LABELLING
ACT	*02	1.00	2400-7502-600	LABEL,RD-301 ACCESSORY S/N
ACT	*04	1.00	2400-8501-000	LABEL,RECEIVING/UNPACKING
ACT	*05	1.00	4100-7623-600	COUPLER 612-A79 MICROLAB
ACT	*06	1.00	6042-0000-012	COAX ASSY,GORTEX 190-54-48
ACT	*07	1.00	7003-4940-000	COMPOSITE ASSY,RD-301
ACT	*08	1.00	5650-7623-500	TERMINATION WF-0055 MICROLAB

CERTIFICATION

IFR, Inc., certifies that this instrument has been thoroughly tested and inspected and found to meet currently published specifications at the time of shipment from the factory. Test Data Sheets, containing factory measured calibration parameters, will be retained for a period of 1 year from date of delivery, at which time factory calibration expires. Copies are available upon request from IFR Customer Service Department for a nominal reproduction fee.

Certified calibration, including a Statement of Compliance issued by IFR Metrology Lab to certify that calibration is directly traceable to the National Bureau of Standards to the extent allowed by the NBS, is also available through IFR Customer Service Department. All requests for certified calibration must be accompanied by a purchase order.

DOMESTIC

LIMITED WARRANTY

IFR Systems, Inc. functionally tests each new instrument manufactured by IFR immediately prior to shipment and warrants the instrument to be free from defects in material and workmanship under normal use and service for a period of TWO (2) YEARS from the shipping date, warrants any battery pack contained in such instrument for Ninety (90) days, and warrants external optional equipment for Thirty (30) days. If, after examination by IFR or its authorized service center, the instrument is determined to be defective in material or workmanship, IFR's obligation under this warranty is limited to replacing or repairing, free of charge except for certain freight charges as described herein, any defective part or parts of the instrument. If the instrument is found not to be defective in material or workmanship, or in the event the warranty claim is invalid because of failure to comply with the provisions herein, IFR shall notify the customer and shall only repair or replace the instrument parts at customer's direction and expense.

The warranty does not apply to any instrument that has been subject to misuse, alteration, negligence, accident, shipping damage, improper installation, or improper operation, or that in any way has been tampered with or repaired by any person other than an authorized IFR service organization or any employee thereof, or to any instrument whose serial number has been altered, defaced, or removed, or to any instrument purchased within and thereafter removed, without express written consent, beyond the continental limits of the United States. Annual recalibration is not included in the warranty.

IFR shall not be liable for any delay or failure to repair or furnish a replacement part, including, but not limited to delays resulting directly or indirectly from any governmental restriction, priority, or allocation, or any other governmental regulatory order or action, nor shall IFR be liable for damages (direct, indirect, or consequential) by reason of the failure of the instrument to perform properly.

IFR assumes responsibility for surface freight charges on all legitimate warranty returns within thirty (30) days from the original shipping date (second day air freight only upon approval by IFR), insurance not to exceed $500 value. Warranty claims filed between thirty-one (31) and ninety (90) days after original shipping date shall be forwarded to IFR surface freight collect (second day air freight only upon approval by IFR), insurance not to exceed $500 value, and will be returned to customer surface freight collect, insured value to be determined and paid by customer. Notwithstanding the above, however, risk of loss on all shipping shall be borne by the customer on all warranty returns to IFR and subsequent redeliveries to customer.

March 14, 1988

This warranty shall, at IFR's option, become void if the equipment ownership is transferred, unless the prior owner or the proposed owner obtains approval from IFR of continuation of the warranty prior to the transfer of ownership.

IFR neither assumes nor authorizes any person to assume for it any other liability or impose any obligation on IFR in connection with the sale or use of the instrument other than those expressly stated above, and there are no oral agreements or warranties collateral to or affecting this warranty.

THIS WARRANTY IS IN LIEU OF ALL OTHER WARRANTIES, EXPRESS OR IMPLIED, INCLUDING ANY IMPLIED WARRANTY OF MERCHANTABILITY AND FITNESS FOR A PARTICULAR PURPOSE NOT SET FORTH IN WRITING SIGNED BY AN AUTHORIZED REPRESENTATIVE OF IFR.

CHANGES IN SPECIFICATIONS.

1. The right is reserved to change the published specifications of the equipment at any time and to furnish merchandise in accordance with current specifications without incurring any liability to modify equipment previously sold, or to supply new equipment in accordance with earlier specifications except under the classification of special apparatus.

SERVICE.

1. When requesting service, the originator shall give IFR information concerning the nature of the failure and the manner in which the equipment was used when the failure occurred. Type, model, and serial number should also be provided.

2. Do not return any products to the factory without first receiving authorization from the factory Customer Service Department.

CONTACT:

IFR SYSTEMS, INC.
10200 W. York Street
Wichita, Kansas 67215 USA

ATTN: Customer Service Department

PHONE: (800) 835-2350 (Customer Service Only)

TWX: 910-741-6952

3. Unless otherwise specifically requested, packaging for a return shipment shall be in the original container and packaging material. If the original container and material are not available, information as to suitable packaging techniques will be provided by the IFR Customer Service Department.

4. Returned material claimed defective, but found to meet all previously applicable specifications, will be subject to a minimum evaluation charge consisting of the labor charges involved in the status determination of the material.

5. Returned material not accompanied by statement of claimed defects may be returned at the originator's expense.

6. Any departure from the above instructions without specific factory authorization can be considered a breach of warranty, and all expenses incurred as a result will be billed to the originator.

March 14, 1988

GENERAL INFORMATION

WARRANTY INFORMATION CARDS

Warranty registration cards are completed and mailed to factory by owner's authorized IFR Distributor, within ten (10) days after retail sale. Owner will be mailed a copy of warranty card, to be retained for personal records.

SHIPPING PROCEDURES

Retain all original shipping cartons for possible future use, in event test instrument is to be returned to factory for calibration and/or repair. Use of containers other than originals, could cause equipment damage which would not be repairable under warranty and could result in warranty of set being voided. Damaged original IFR shipping cartons will be replaced at no charge to customer.

When returning units to factory for calibration, service or repair, please include antennas and attenuation pads. Return of power cords is not necessary.

Units will be returned to customers utilizing same conveyances by which received when possible.

CERTIFIED CALIBRATION COSTS

Periodic certified calibration, traceable to National Bureau of Standards (as required by FAA and FCC regulations) is not covered by IFR Warranty. Calibration fees* are listed below:

Instrument Model	Cost	Instrument Model	Cost
A7550	$275.00	L-1000	$115.00
A8000	$300.00	MDL-111A	$ 75.00
ATC-600	$250.00	MLS-800	$400.00
ATC-600A	$250.00	MLS-801	$300.00
ATC-1200	$299.00	MM-100	$ 75.00
ATC-1200Y3	$299.00	MM-100E	$ 75.00
ATC-1400	$400.00	NAV-401L	$250.00
ATC-1400A	$400.00	NAV-402AP	$300.00
COMM-760	$200.00	NAV-750	$245.00
CS-360D	$200.00	NAV-750A	$255.00
FM/AM-500	$200.00	NAV-750B	$255.00
FM/AM-500A	$200.00	NAV-750BR	$275.00
FM/AM-1000A	$275.00	RD-300	$300.00
FM/AM-1000S	$300.00	RD-301	$400.00
FM/AM-1100A	$275.00	RDX/RDC-3000	$300.00
FM/AM-1100S	$300.00	RDX/RDC-7708	$400.00
FM/AM-1200	$300.00	S-1403	$300.00
FM/AM-1200A	$275.00	T-1200SR	$300.00
FM/AM-1200S	$300.00	T-1200SRA	$300.00
FM/AM-1500	$400.00	T-1401	$300.00
I-1402	$300.00		

MISCELLANEOUS FEES*

A $10.00 minimum billing charge exists for non-warranty parts. Parts sent to customers will be insured only if IFR cost of contents exceeds $50.00. Warranty on batteries in portable units is 90 days.

CUSTOMER SERVICE INFORMATION

For calibration scheduling or service related information, contact IFR Customer Service Dept. at following:

IFR Systems, Inc., Customer Service Dept.
10200 West York Street, Wichita, Kansas 67215 Tel. (800)-835-2350

* Prices and availabilities subject to change without notice.

Bill Baker, Director-Product Service
Ken Lewis, Manager-Quality Assurance

March 14, 1988

MP MASTER
MA30513